Working of Wireless Sensor Network (WSN): Survey

Shwetal Raipure
Assistant Professor
Computer Science and Engineering Department
Priyadarshini Indira Gandhi College of Engineering, Nagpur, India

Received: January 30, 2019 Accepted: March 11, 2019

ABSTRACT: *Wireless Sensor network is used nowadays almost everywhere. A sensor node, in a sensor network that is capable of performing some processing, gathering sensory information and communicating with other connected nodes in the network. A Sensor is a device that responds and detects some type of input from both the physical or environmental conditions, such as pressure, heat, light, etc. The output of the sensor is generally an electrical signal that is transmitted to a controller for further processing. Thus in this paper we will discuss about the working of Wireless Sensor Network.*

Key Words: *Sensor node, Wireless Sensor Network, Controller*

I. Introduction

A Wireless Sensor Network includes the devices which may conatin circulating, self-directed, low powered devices called as sensor nodess which require spatially distributed, little, battery-operated, embedded devices that are networked in such a way that they will collect, process, and transfer data to the operators, and it has controlled the capabilities of computing & processing. Nodes are very important factor to form the network.

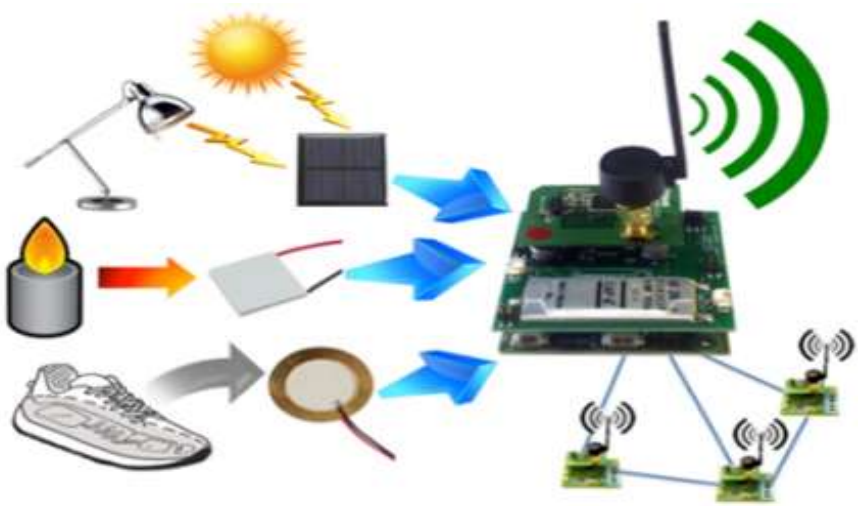

Fig. 1: Architecture of Wireless Sensor network

Sensors which are multifunctional, energy efficient wireless deviceare required to collect the data from different areas and send it to the required Controller.The communication between nodes can be done with each other using transceivers. WSN architecture follows the OSI architecture Model. The architecture of the WSN includes five layers and three cross layers. The five layers include five layers, namely application, transport, n/w, data link & physical layer. The three cross planes are namely power management, mobility management, and task management.To make the network completely efficient all layers of the WSN and sensors work together.

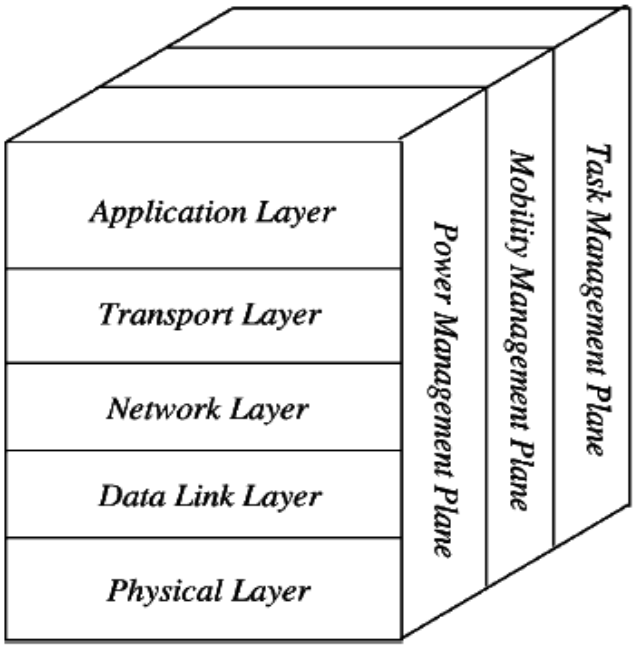

Fig.2: Layers used in WSN

Application Layer:
The application layer is used for traffic management which provides software for various applications that convert the data in a clear form which is used to find positive information.

Transport Layer:
The transport layer is used to avoid congestion which provides reliability. These protocols use dissimilar mechanisms for loss recognition and loss recovery. The transport layer is strongly needed when a system is planned to contact other networks.TCP is not fit for WSN because it provides a reliable loss recovery which is more energy efficient. Transport layers can be separated into Packet driven, Event driven. There are some popular protocols in the transport layer namely STCP (Sensor Transmission Control Protocol), PORT (Price-Oriented Reliable Transport Protocol and PSFQ (pump slow fetch quick).

Network Layer:
The main function of the network layer is routing,power conserving, partial memory, buffers, and sensor don't have a universal ID and have to be self organized.Routing protocol is used to explain a reliable lane and redundant lanes which varies from protocol to protocol. There are a lot of existing protocols for this network layer.

Data Link Layer:
The data link layer is used for multiplexing data frame detection, data streams, MAC, & error control, confirm the reliability of point–point (or) point– multipoint.

Physical Layer:
The physical layer provides a medium for transferring a stream of bits above physical medium. This layer is responsible for the selection of frequency, generation of a carrier frequency, signal detection, Modulation & data encryption.

Characteristics of WSN

1) The consumption of Power limits for nodes with batteries
2) Capacity to handle with node failures
3) Some mobility of nodes and Heterogeneity of nodes
4) Scalability to large scale of distribution
5) Capability to ensure strict environmental conditions
6) Simple to use
7) Cross-layer design

Advantages of Wireless Sensor Networks:

1) Network arrangements can be carried out without immovable infrastructure.
2) Apt for the non-reachable places like mountains, over the sea, rural areas and deep forests.
3) Flexible if there is a casual situation when an additional workstation is required.
4) Execution pricing is inexpensive.
5) It avoids plenty of wiring.
6) It might provide accommodations for the new devices at any time.

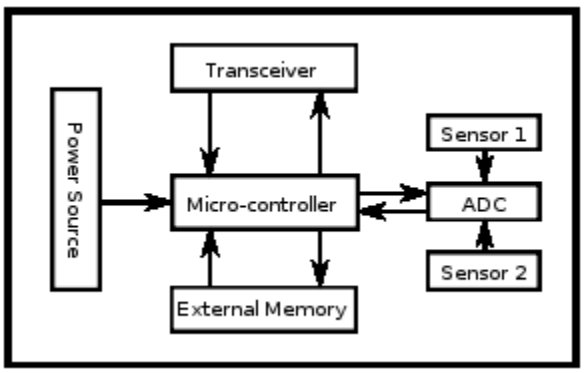

Fig. 3:Working of WSN

Controller

The controller performs tasks, processes data and controls the functionality of other components in the sensor node. While the most common controller is a microcontroller, other alternatives that can be used as a controller are: a generalpurpose desktop microprocessor, digital signal processors, FPGAs and ASICs. A microcontroller is often used in many embedded systems such as sensor nodes because of its low cost, flexibility to connect to other devices, ease of programming, and low power consumption.

Transceiver

Sensor nodes often make use of ISM band, which gives free radio, spectrum allocation and global availability. The possible choices of wireless transmission media are radio frequency (RF), optical communication (laser) and infrared. Lasers require less energy, but need line-of-sight for communication and are sensitive to atmospheric conditions. Infrared, like lasers, needs no antenna but it is limited in its broadcasting capacity.

External memory

From an energy perspective, the most relevant kinds of memory are the on-chip memory of a microcontroller and Flash memoryoff-chip RAM is rarely, if ever, used. Flash memories are used due to their cost and storage capacity. Memory requirements are very much application dependent. Two categories of memory based on the purpose of storage are: user memory used for storing application related or personal data, and program memory used for programming the device. Program memory also contains identification data of the device if present.

Power source

A wireless sensor node is a popular solution when it is difficult or impossible to run a mains supply to the sensor node. However, since the wireless sensor node is often placed in a hard-to-reach location, changing the battery regularly can be costly and inconvenient. An important aspect in the development of a wireless sensor node is ensuring that there is always adequate energy available to power the system. The sensor node consumes power for sensing, communicating and data processing.

Sensors

Sensors are used by wireless sensor nodes to capture data from their environment. They are hardware devices that produce a measurable response to a change in a physical condition like temperature or pressure. Sensors measure physical data of the parameter to be monitored and have specific characteristics such as accuracy, sensitivity etc. The continual analog signal produced by the sensors is digitized by an analog-to-digital converter and sent to controllers for further processing.

Types of WSN:

Terrestrial WSN:
It consists of thousands of wireless sensor nodes deployed either in unstructured (ad hoc) or structured (Preplanned) manner. In an unstructured mode, the sensor nodes are randomly distributed within the target area.In structured mode it considers optimal placement, grid placement, and 2D, 3D placement models.

Underground WSN:
The WSNs networks consist of a number of sensor nodes that are hidden in the ground to monitor underground conditions. To relay information from the sensor nodes to the base station, additional sink nodes are located above the ground.

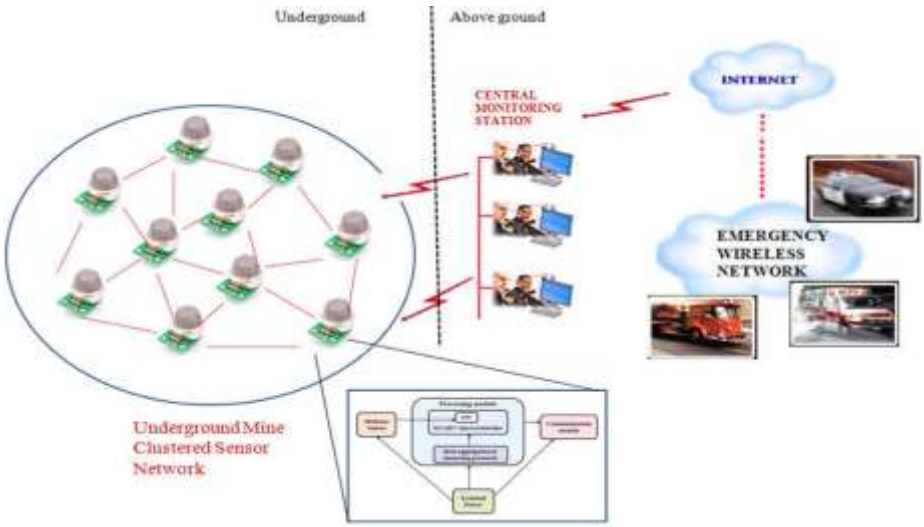

Fig. 4: Underground Wireless Sensor Network

Under Water WSN:
These networks consist of a number of sensor nodes and vehicles deployed under water. Autonomous underwater vehicles are used for gathering data from these sensor nodes.

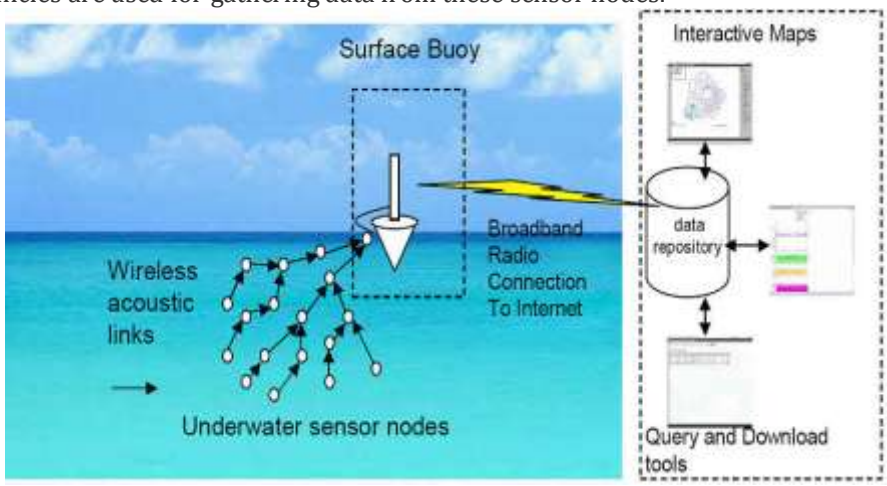

Fig. 5: Underwater Wireless Sensor Network

Multimedia WSN:
Multimedia wireless sensor networks have been proposed to enable tracking and monitoring of events in the form of multimedia, such as imaging, video, and audio. These networks consist of low-cost sensor nodes equipped with microphone and cameras.These nodes are interconnected with each other over a wireless connection for data compression, data retrieval.

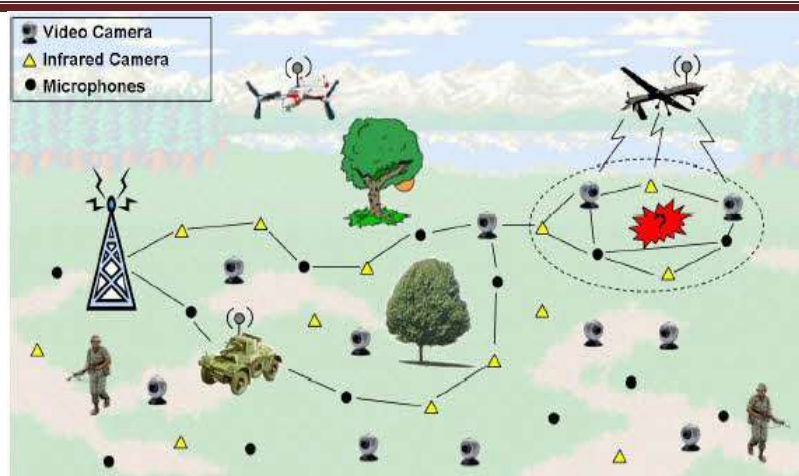

Fig. 6: Multimedia Wireless Sensor Network

Mobile WSN:

These networks consist of a collection of sensor nodes that can be moved on their own and can be interacted with the physical environment. The mobile nodes have the ability to compute sense and communicate.

CONCLUSION :

WSN is a promising future technology and currently used in various applications that requires minimum human intervention. In this paper we have surveyed the WSN technology with its Reference Model and working layer.There are Different types of Wireless Sensor Network which are used for different applications.

References

1. J.-S. H. Lee,Yang-Chih. 2006.ITRI ZBnode: A ZigBee/IEEE 802.15.4 Platform for Wireless Sensor Networks: pp. 1462-1467.
2. Vidyasagar Potdar ; Atif Sharif ; Elizabeth Chang,May 2009.Wireless Sensor Networks: A Survey:10747365
3. https://www.elprocus.com/introduction-to-wireless-sensor-networks-types-and-applications/