Railway Track Pedestrian Crossing between Platforms

Prof. M. S. Mali *,Poonam Somwanshi[1], Kajol Ingale[2], Geetanjali Jagtap[3]
Electronics And Telecommunication Savitribai Phule Pune University Modern Education Society College of Engineering, Pune

Received: February 08, 2019 Accepted: March 27, 2019

ABSTRACT: *In this project we are going to close or open the movable platform where people are waiting for train. This is done mechanically. Movable platform is in which the passenger can move from one platform to the other platform. When sensor detect the train, platform closes and it allows the train to go through track and when it reaches to other sensor it automatically gets open. Microcontroller is used for sending the signals. Stepper motor is used to open and close the platform. Piezoelectric sensor is used to generate power, when people walk on platform due to the weight of people power is generated.*

Key Words: *Arduino, Dc Gear Motor, IR-Sensor, Piezoelectric sensors*

INTRODUCTION

The modern railway structures in India aren't device-managed which are absolutely synthetic. In railroad track station usually we use bridges. It's a long way very hard for the senior residents or handicapped humans to use the bridge. This finds beneficial answer. Specifically the route of a train is sense by means of sensor that used for mechanically near/open cellular bridge. Sensor is positioned on both facet of track to experience the movement of train. The microcontroller will feel the trains with the aid of the use of infrared sensors. So on recognition the train on one track, the controller will deliver pulsate to the stepper motor to close the movable platform robotically.

LITERATURE SURVEY

By design the Railway Track Pedestrian Crossing between Platforms we can reduce the difficulty of the senior residents or handicapped persons to use the bridge. Nowadays bridges are used for crossing the platform.

1. Railway Track Pedestrian Crossing between platform.

et.el monitoring of train is sensed constantly, which robotically close/open the mobile platform is in part automatic that's useful for passengers to go the rail grade crossing. The gadget into a fully automated as opposed to hiking the staircase. This efficient approach may be extra close for maintaining the train timings for accomplishing the precise destination and additionally for crossing the precise platforms [1].

2. Electrical Power Generation Using Foot Step for Urban Area Energy Applications.

et.el Electric strength generation the use of foot step for city area strength applications. Man has desired energy at an developing rate for his sustenance and properly being ever considering the fact that he got here on the planet. Due to this lot of electricity useful aid were exhausted and wasted. Concept for the usage of waste energy with foot strength human locomotion can be very a exceptional deal applicable and can be very important for quite populated worldwide locations in INDIA and CHINA, in which the roads, railway stations, bus stands and temples are overcrowded and tens of tens of millions of humans moving throughout the clock. With the aid of the usage of such precept the power can be utilized inside the complete vicinity wherein the mechanical energy is being transformed to electric strength [2].

3.Railway Track Pedestrian Crossing without using Staircase.

et.el in this mission cellular platform is routinely near/open. It store the time for passengers to go the subsequent platform. The monitoring is made constantly whenever the train comes and bypass through. Thus the tracking of train is sensed constantly, which robotically near/open the cellular bridge is partially automatic for passengers it is beneficial to pass the rail grade crossing. This green technique can be more close for scheduling the train timings for reaching the suitable vacation spot and also for crossing the perfect systems [3].

4.Pedestrian non-compliance at railway level crossing gates.

et.el the observer stated 52 incidents at some stage in which pedestrians and cyclists crossed earlier than a train while the alarm was sounding. Descriptive facts about the station, the pedestrian or cyclist and the state of affairs for these incidents are given under. Seven incidents in which pedestrians opened the gates to pass after the teach at the same time as the alarm become nevertheless sounding are described one at a time. To avoide such incident this system is implemented[4].

PROPOSED WORK

When the train passes from the IR sensor sense the train and pass signal to the microcontroller. Microcontroller goes in alert mode and it will on the LED and buzzer. This will gives signal to the platform and the platform will open. When another side IR sensor sense the train it will again send signal to the controller and the platform will close again through the stepper motor.Here we use piezoelectric sensor which are mounted below the platform. This sensors will generate the electric energy while crossing the bridge. This energy we can use to run domestic appliances which are use at station such as fans, tube lights, etc.

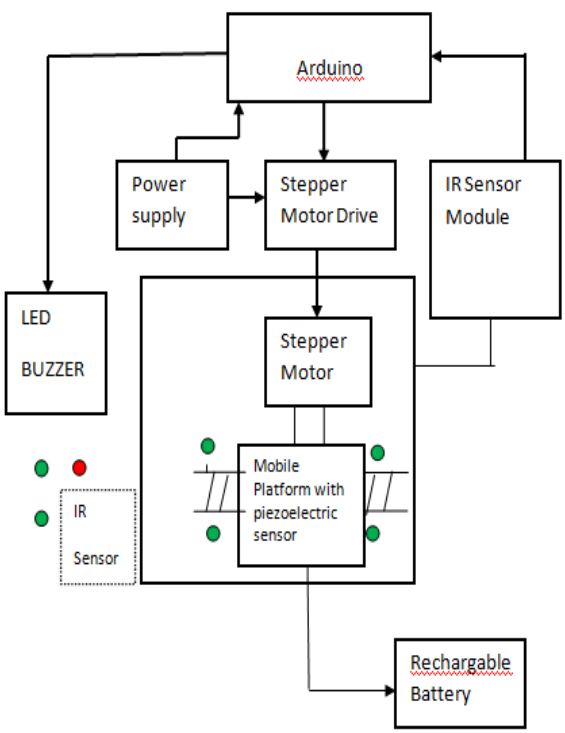

Fig 1.1: system block diagram

FLOW CHART

Make the initial settings for train and platform users. If the train arrives from either direction then the LED and buzzer will goes in alert mode. Then the controller will check for obstacles if there is obstacle then it will continue the buzzer and LED alert. If there are no obstacles then it will stop warning and move the platform. It will again check for the departure of train if the train departure then it will again move the platform.

And the system again makes the initial settings for train and platform users.

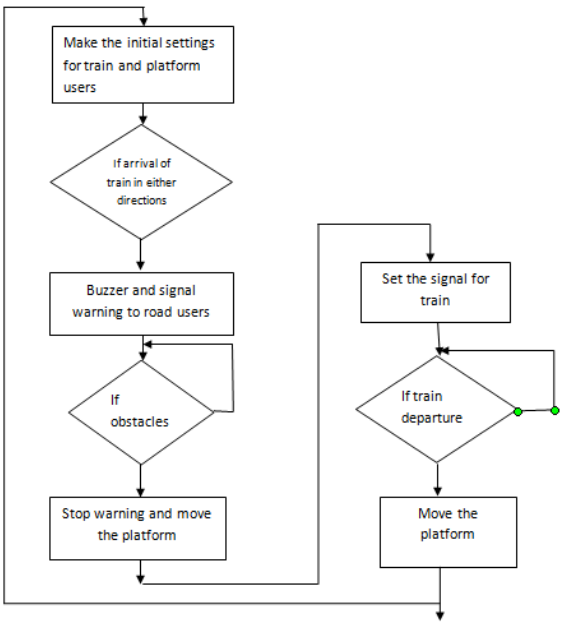

Fig 1.2 : Flowchart of Railway Track Pedestrian Crossing between Platforms

RESULT

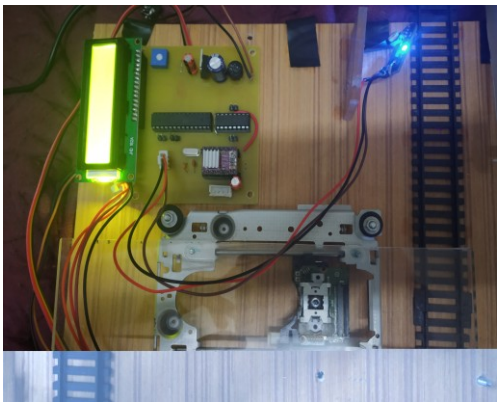

CONCLUSION

Here design is used to routinely near/open the movable bridge. It store time for pedestrian to pass subsequent platform. Sensing is made constantly each time train comes and bypass through. For this reason the

tracing of train is sensed constantly, which mechanically near/open the cellular bridge is in part automatic this is worthwhile for passengers to go the rail grade crossing. This green technique may be greater dense for maintaining the train timings for attaining unique vacation spot and additionally for crossing the right systems. Energy is generated with the aid of piezoelectric sensor is used to run the home domestic equipment used at station.

REFERENCES

1. G.Prabhavathi,B.Sanjana,Ms.S.P.Dhivya(Ap/Ece),"Railway Track Pedestrian Crossing Between Platforms", ISOR Journal of Electronics and Communication Engineering(ISOR-JECE),(Mar-Apr.2014),Volume 9,PP 87-91.
2. Joydev Ghosh, Supratim Sen, Amit Saha, Samir Basak,"Electrical Power Generation Using Step for Urban Area Energy Applicaions", 2013 IEEE
3. Adarsh K. S, Riya Robert, Kavia E, "Railway Track Pedestrain Crossing Without Using Staircase".International Journal of Emerging Technology and Advanced Engineering(ISSN 2250-2459,ISO 9001:2008 Certified Journal,Volume 5,Issue 12,December 2015).
4. Jessica Edquist, Brett Hughes, Christina M.Rudin-Brown,"Pedestrain non-compliance at Railway Level Crossing Gates", MONASH University, August 2011.
5. Rail Safety and Standards Board (2010). "Road-Rail Interface Special Topic Report".April 2010. London, United Kingdom.
6. American Railway Engineering and Maintenance of Way Association (AREMA) (2010). Communications & Signal Manual, 2010 Edition, Volume 1.
7. 26. Korve, H.W., J.I. Farran, D.M. Mansel, H.S. Levinson, T. Chira-Chavala, and D.R. Ragland (1996). "Integration of Light Rail Transit into City Streets". TCRP Report Transportation Research Board, Washington, D.C.
8. Silla, A. and J. Luoma (2011). Effect of Three Counter measures against the Illegal Crossing of Railway Tracks. Accident Analysis and Prevention, Volume 43, Issue 3.
9. Delmonte, E. and S. Tong (2011). Improving Safety and Accessibility at Level 29 Crossings for Disabled Pedestrians. Report Number T650. Rail Safety and Standards 30 Board, London, United Kingdom, February 2011.