Musical Instrument recognition using LPC and K-nearest neighbour classifier

R.S. Kothe[1] & Dr.D.G.Bhalke[2] & Sonali Bhosale[3]
[1,3]SKNCOE, Pune
[2]AISSMS College of Engineering, Pune.

Received: February 21, 2019 Accepted: March 26, 2019

ABSTRACT: *Now a days the demand for online access to music data is increasing day by day. The need for proper searching for multimedia data on internet has become a major challenge in intelligent browser in internet search engine. Musical instrument recognition helps in proper searching of musical data on internet.*
In this paper, the problem of recognizing and classifying of musical instruments is addressed. The musical instruments are classified using linear predictive coding features and KNN classifier. The proposed system is tested with 19 Musical instruments from String, Percussion, Brass and woodwind family. The proposed system gives accuracy of 75.67% for individual instruments and 78.5 % for instrument family.

Key Words: *Musical instrument classification, LPC, KNN, Feature Extraction.*

I. Introduction

In this research work a computer system will listen to musical note played and recognize the type and family of musical instrument. The various applications of musical instrument classification systems are automatic indexing, Musical Information Retrieval, Musical content analysis and database retrieval.
Music is not only used for entertainment and for pleasure but also for wide range of purposes due to its social and physiological effects. Efficient and accurate classification of musical instruments has become an important issue in music search. Human beings have natural ability to recognize and classify sounds in a variety of situations. The ear collects sound and presents it to the brain for processing. The human brain recognizes and classifies this sound after processing this information. Some of the questions which remain unanswered in recognizing sounds by human brain are: How and what kind of information does the brain receive from human auditory sensory organs? Which features are crucial and which are redundant or even which do cause confusion in the recognition and classification process?
Though computer systems are used to recognize sounds with the help of extracted features, none of the systems has come close to the recognition ability of humans. So the problem of musical instrument classification remains an open problem.
This paper is organized as follows. Introduction is given section I, a review of related work is described in Section II. Proposed method is covered in Section III and Section IV deals with Result and conclusion.

II. Literature Review

Brown et al. [1], [2] built classification system using cepstral coefficients which are based on the constant-Q transform. K-means classifier is used to differentiate between oboe and saxophone. An error rate of 15% is observed in this work. Martin and Kim [3] designed a system which identified 15 musical instruments. The test and training samples were recorded with the help of different instruments. The authors observed an error rate of 28.4%. Further, Marques and Moreno [4] used SVMs and Gaussian Mixture Models (GMMs) for instrument identification and observed recognition accuracy of 70% for 8 instruments. The different instruments used are clarinet, piano, bagpipes, violin, flute, organ, harpsichord and trombone . Consequently, Eronen and Klapuri [5], used cepstrum coefficients features with other 21 features such as spectral spread centroid, , rise and decay time, frequency & amplitude modulation rate, and fundamental frequency for classification of instruments. The author reported an accuracy of 75-80% for 30 instruments playing a single note. Later, Eronen [6] used a wider range of feature vectors, which included both MFCC, LP and delta coefficients. They analyzed 23 features and also studied the relevance of each feature for classification. Mel-Frequency cepstrum coefficients (MFCCs) alone were able to classify correctly in 20–30% of instances, using 29 instruments. D. G. Bhalke et al.[7] presented a novel feature extraction technique for classification of musical instruments using Fractional Fourier Transform (FrFT)-based MFCC features. The Counter Propagation Neural Network (CPNN) has been used as classifier. The discriminating capability of the proposed features have been increased for between-class and decreased for within-class instruments.

Also, Bhalke et al. [8} presented the classification of musical instruments using HOS and MFCC based features. In this HoS based features provide Non Gaussianity and Non linearity features along with MFCC. The extracted features have been applied to CPNN for further classification.

III. PROPOSED METHODOLOGY

It consists of training and testing part. The training part consists of:

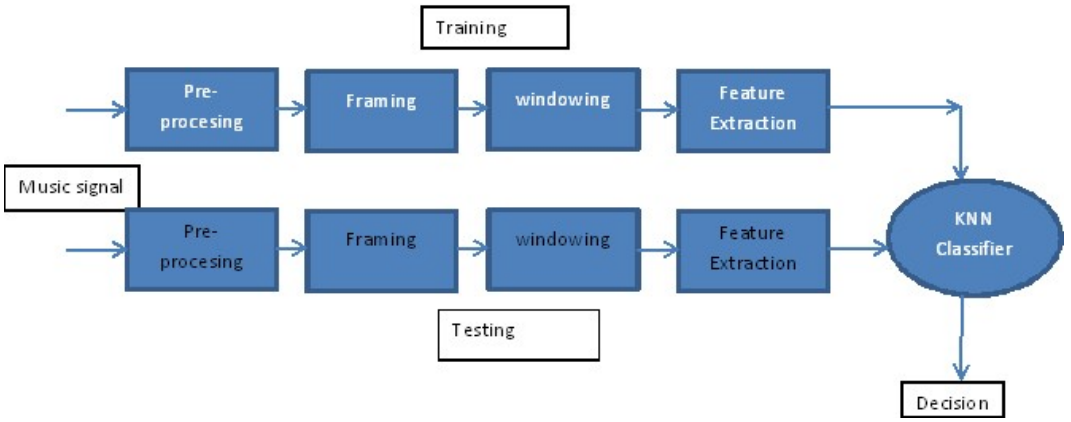

Figure1: Block diagram of Musical instrument classification system

Pre-processing: In this a silence part of the signal is removed using ZCR & energy fetures. The computational complexity of the system is reduced by removing silence part of the signal.
Framing and windowing: Music is non-stationary signal , the short time analysis is preferred for it. In short time analysis the signal is framed with 20 ms duration and multiplied with hamming window function to avoid the Gibb's phenomenon.
Feature extraction: It is important part of the system. The purpose of feature extraction is to obtain the compact and relevant information from the signal. In this work we are extracting Linear predictive coding features.
Linear predictive coding (**LPC**) represents the spectral envelope of a music signal in compact form. It is most powerful music analysis techniques. It is also used for encoding music at a low bit rate and provides accurate estimates of music parameters.
The linear predictive coding (LPC) is based on modelling body of instrument using IIR filter (all pole model with the system transfer function:

$$H(z) = \frac{G(z)}{(1 - \sum_{k=1}^{p} a_k \ z^k)} \qquad (1)$$

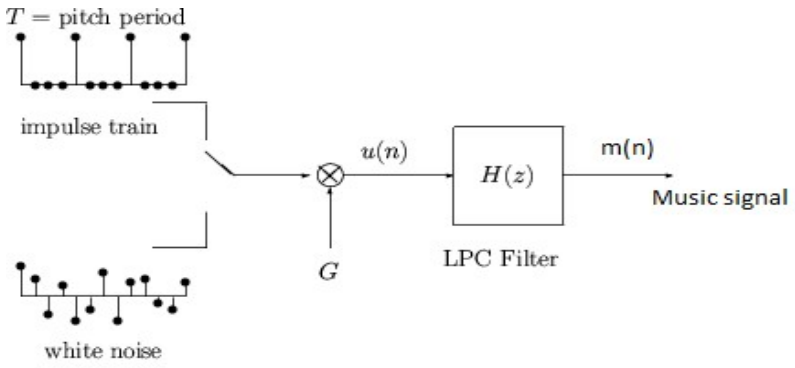

Figure 2: Music signal generation using LPC filter

Here p is number of poles, a[k] determine poles, and G is gain of filter. As music signal is periodic with fundamental frequency F_0 and pitch (1/F0) , the short time analysis is considered. These parameter depends on instruments.

Using linear prediction , all-pole model parameters are computed from music samples.
The output of linear prediction filter is given by.
It is linear combination of past music samples.

$$m(n) = -\sum_{i=1}^{p} a_p(i)\ m(n-i) \qquad (2)$$

The error between the observed and predicted samples of music signals is given by

$$e(n) = m(n) - \hat{m}(n) \qquad (3)$$

The all pole parameters $a_p(i)$ are computed by minimising the sum of squared error. The set of 'p' linear equations are obtained by by differentiating the sum w.r.t. each parameters and equating result to zero.

$$\sum_{i=1}^{p} a_p(i) r_{xx}(m-i) = -r_{xx(m)} \qquad (4)$$

Where m=1, 2, 3, 4, ... p and $r_{xx(m)}$ is autocorrelation of the sequence m(n)
The autocorrelation of the sequence is given by

$$r_{xx(m)} = \sum_{n=0}^{N} m(n)m(n+m) \qquad (5)$$

The equation (5) can be expressed in matrix form as

$$R_{xx}a = -r_{xx(m)} \qquad (6)$$

Where $R_{xx}a$ is P x P autocorrelation matrix, r_{xx} is a P x 1 autocorrelation vector.
These LPC coefficients are used as feature vector for classification of musical instruments.

K-NN Classifier:

K-Nearest neighbour is non parametric, lazy and simple algorithm. KNN stores all samples and classify new samples based on similarity measures. There are structure less and structure based NN types of KNN. All sample data are classified into training and testing samples in structure less type. Structure based K-NN type are based on structures of sample data like orthogonal structure tree (OST), ball tree, k-d tree etc. .In this all attributes are continuous.
KNN algorithm is described below.

- Compute the K training instances which are nearest to unknown instances
- Find the most nearest class for these K instances

Some of the application of KNN is classification, interpretation, problem solving, function learning etc. Some of the drawbacks of KNN are selection of value of K, low efficiency and dependency.

IV. RESULT

Table I shows the performance analysis of individual feature subset using KNN classifier. For 19 Instruments from four different families the recognition accuracy for individual instruments are 71.13%, 61.23%, 72.54%, 75.67% using Timbral, Cepstral, MFCC and LPC features. No of features used for Timbral, Cepstral, MFCC and LPC are 13, 11, 13 and 12 respectively. The result show that using 12 number of feature using LPC the recognition accuracy is good. It reflects that the LPC models the body of the musical instruments and distinguishes well from each other. Also, For 19 Instruments from four different families the recognition accuracy for instrument family are 75.12%, 67.23%, 75.98%, 78.5% using Timbral, Cepstral, MFCC and LPC features respectively. No of features used for Timbral, Cepstral, MFCC and LPC are

13, 11, 13 and 12 respectively. The result show that using 12 number of feature using LPC the recognition accuracy for instrument family is also comparable. Fig. 3 also shows the % accuracy for individual instruments and instrument family for Timbral, Cepstral, MFCC and LPC.

TABLE I
CLASSIFICATION ACCURACY USING DIFFERENT FEATURES

Sr. No.	Feature subset	No of features	Instrument recognition accuracy (%)	Instrument classification (%)
01	Timbral (Spectral + Temporal)	13	73.13	75.12
02	Cepstral	11	61.23	67.23
03	MFCC	13	72.54	75.98
04	LPC	12	75.67	78.5

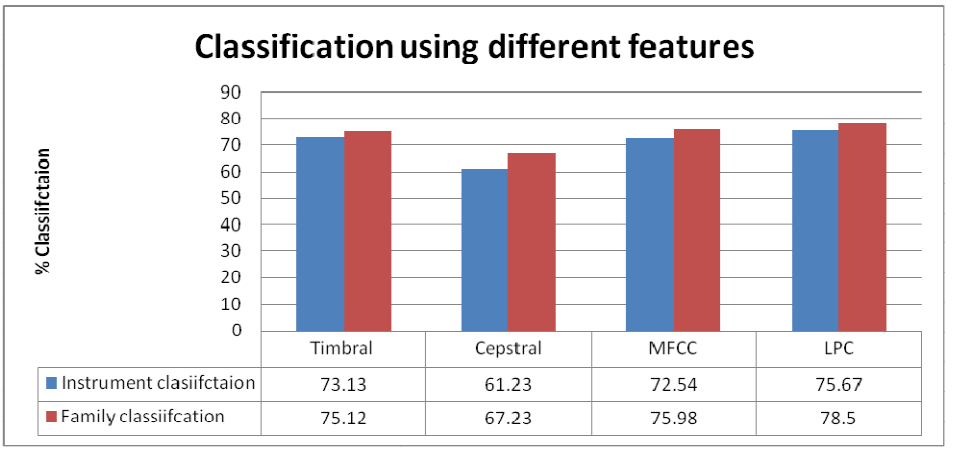

Fig. 3: Average classification accuracy for individual features subset

Table 2 represents the individual instrument and family classification using different feature subset.

IV. CONCLUSION

The maximum separabality between and within the class has been obtained using LPC features. As LPC model the spectral envelope of the music signals and also models the response of the body of the musical instruments. So these features help to distinguish the musical instruments better compared to other feature set.

References

[1] J. Brown, "Musical instrument identification using autocorrelation coefficients", in Proceedings of the International Symposium on Musical Acoustics, 1998.
[2] J. C. Brown, "Computer identification of musical instruments using pattern recognition with cepstral coefficients as features", The Journal of the Acoustical Society of America, vol. 105, no. 3, p. 1933, 1999.
[3] Martin, K.D. and Kim, Y.E., "Musical Instrument Identification: A Pattern- Recognition Approach", 136th Meeting of the Acoustical Society of America, October, Norfolk, VA., 1998.
[4] J. Marques and P. J. Moreno, "A study of musical instrument classification using Gaussian mixture models and support vector machines", Compaq Cambridge Research Laboratory, Tech. Rep., 1999.
[5] A. Eronen, "Comparison of features for musical instrument recognition", IEEE Workshop on the Applications of Signal Processing to Audio and Acoustics, pp. 19–22, 2001.
[6] A. Eronen, "Musical instrument recognition using ICA-based transform of features and discriminatively trained HMMs",7th International Symposium on Signal Processing and its Applications, vol. 2, p. 133, 2003.
[7] Bhalke D. G., Rama Rao C. B., Bormane D.S. "Automatic Musical Instrument classification using Fractional Fourier Transform based-MFCC Features and Counter Propagation Neural Network", *Journal of Intelligent Information Systems*, Springer International Publishing, **DOI: 10.1007/s10844-015-0360-9**
[8] Bhalke D. G., Ram Rao C.B., Bormane D.S. " Musical Instrument Recognition Using higher order moments", *CIIT International journal of Digital signal processing*, April 2013, ISSN:0974-9705, DOI042013002