Modeling and Simulation of Fin Actuation System

Vivian Pereira, Benjamin Varughese,Pooja Jahagirdar, Dr.A.J.Hake
Department of Electronics and Telecommunications Engineering,
Modern Education Society's College of Engineering, Pune, Maharashtra

Received: April 01, 2019 Accepted: May 01, 2019

ABSTRACT: : *This paper tells about the modelling and simulation of a missile fin actuation system where we have studied the comparion be- tween different control system methods like PID controllers and Fuzzy logic control, dif- ference between different controller boards like SHARC DSP and an FPGA. This pa- per also shows the simulation of the rotor position and rotor speed of the BLDC mo- tor.*

Key Words: *Fin Actution, PID, FPGA, BLDC motor, Matlab.*

Introduction

1.1 Background

The anti-tank missiles have reached the stage of requirement for faster and long range use keeping smaller in size. Thus to drive and control these missiles during flight, actuation systems are required to control the position of the fins. These actu- ation systems were traditionally driven by brushed dc motors or were pneumatic systems, but with higher requirements for im- provements ,brushless dc motors came into picture which enabled higher efficiency with smaller and lighter actuation system de- signs

1.1.1 Problem statement

Designing and simulation a missile fin actu- ation system driven by a brushless dc motor

1.2 Objectives

To model and simulate a fin actuation system of the missile driven by a brushless dc motor.

Physical constraints which need to be overcome are slew rate, Voltage, current limit and uncertainity of actuator dynam- ics.

Simulation of system response using MATLAB with SIMULINK/Labview.

Literature survey

Research Paper on:

"Multi-Mode Electric Actuator Dy- namic Modelling for Missile Fin Con- trol"

This paper plans to incorporate a nonex- clusive DC blade actuator show with dou- ble mode feedforward and criticism control for tail-controlled rockets related to the au- topilot framework structure. In addition, the qualities of the actuator torque data in connection to the streamlined blade stack- ing for given rocket trim speeds are like- wise given. The curiosity of this paper is the reconciliation of the rocket LATAX au- topilot states and actuator states includ- ing the engine torque, position and precise speed. The benefit of such a methodology is the parametric investigation and reason- ableness of the blade actuator in connection to the rocket horizontal speeding up unique conduct.

Research Paper on:

"Self-Tuning PID Control Struc- tures"

In PID controller the controller transfer function is given as: This is one of the many forms of the PID controller equation. Emulator-based control is a unifying ap- proach to many forms of controller includ- ing generalized minimum variance control and generalized predictive control. It can also be shown to be equivalent to internal model control.

Research Paper on:

"Adaptive Sliding Mode Control for Bank-To-Turn Missiles"

BTT missile exploit high-lift and low-drag features, possess the advantage of high ma- neuverability and aerodynamic acceleration ver skid-to-turn (STT) missiles. However, the high roll rate, which is desired dur- ing the bank-to-turn process, induces un- desirable cross-coupling effects between the pitch and yaw motions. The design of autopilot cannot be based on independent pitch, yaw and roll channels, since the cross- coupling effects cannot be neglected due to the asymmetric structure of BTT missiles.

Methodology

1.3 PID controllers

A relative basic subordinate controller (PID controller) is a control circle criticism in- strument (controller) generally utilized in mechanical control frameworks. A PID con- troller computes a mistake an incentive as the distinction between a deliberate proce- dure variable and an ideal setpoint. The controller endeavors to limit the mistake by changing the procedure through utilization of a controlled variable.

The PID controller calculation includes three separate consistent parameters, and is in like manner now and then called three-term control: the relative, the ba- sic and subsidiary qualities, meant P, I, and D.Basically, these qualities can be de- ciphered regarding time: P relies upon the present blunder, I on the collection of past mistakes, and D is a forecast of future blun- ders, in view of current rate of progress.

The weighted whole of these three activi- ties is utilized to change the procedure by means of a control component, for example, the situation of a control valve, a damper, or the power provided to a warming com- ponent. Without information of the fun-

damental procedure, a PID controller has truly been viewed as the most helpful con- troller. By tuning the three parameters in the PID controller calculation, the con- troller can give control activity intended to explicit procedure necessities.

The reaction of the controller can be por- trayed as far as the responsiveness of the controller to a blunder, how much the con- troller overshoots the setpoint, and the level of framework swaying.

A few applications may require utilizing just a couple of activities to give the fitting framework control. This is accomplished by setting alternate parameters to zero. A PID controller will be known as a PI, PD, P or I controller without the separate control ac- tivities.

PI controllers are genuinely normal, since subordinate activity is touchy to estimation clamor, while the nonattendance of a basic term may keep the framework from achiev- ing its objective incentive because of the control activity.

1.4 Fuzzy logic control

A fuzzy control framework is a control framework dependent on fuzzy logic—a nu- merical framework that breaks down simple information esteems as far as legitimate fac- tors that take on persistent qualities some- where in the range of 0 and 1, as opposed to established or advanced rationale, which works on discrete estimations of either 1 or 0 (genuine or false, respectively).

Fuzzy controllers are exceptionally basic theoretically. They comprise of an infor- mation arrange, a handling stage, and a yield organize. The info arrange maps sen- sor or different information sources, for ex- ample, switches, thumbwheels, etc, to the proper enrollment capacities and truth es- teems. The handling stage summons each suitable standard and produces an outcome for every, at that point joins the conse- quences of the principles. At last, the yield arrange changes over the consolidated out- come once more into a particular control yield esteem.

Fuzzy control framework configuration de- pends on observational strategies, funda- mentally a systematic way to deal with ex- perimentation. The general procedure is as per the following:

-Record the framework's operational de- terminations and information sources and yields.

-Archive the fluffy sets for the sources of info.

-Archive the standard set.

-Decide the defuzzification strategy.

-Go through test suite to approve frame- work, modify subtleties as required.

-Complete archive and discharge to genera- tion.

Block Diagram

The below figure shows the block diagram of fin actuation system. After the simula-

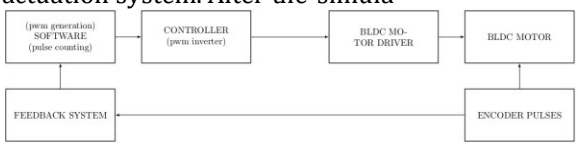

Figure 1: Block diagram of fin actuation system

tion, for the modeling of this fin actuation system, the explanation of the block dia- gram goes as follows:

1) Using a compatible software(like Visu- alDSP++ or XILINX ISE for SHARC DSP and FPGA respectively), generate a PWM signal initially.

2) This PWM signal is then fed to the PWM inverter(i.e. any controller board eill be us- ing).

3) It then drives the BLDC motor and con- trols the position and speed of the rotor. This is possible because of the pre set value in the program logic while generating the PWM signal.

4) The hall sensors(i.e. the encoder) then with the rotor speed and position ,generates pulses which are fed back to the controller for adjusting the frequency as per require- ment, curing the error caused by the differ- ence between the input and output.

5) Once the frequency is set, the motor ro- tates at the required speed and keeps chang- ing its position to accurately hit the target. PID system. For the same we will be work- ing on either a DSP controller or an FPGA controller. We will strive to increase the performance factors. For the graphic user interface we will be using LabVIEW soft- ware.

6 Hardware Description

6.1 Controllers

6.1.1 ADSP 21262

The ADSP-21262 EZ-KIT Lite furnishes designers with a financially savvy strategy for introductory assessment of the ADSP- 21262 SHARC Processor engineering for sound applications by means of a USB- based PC-facilitated apparatus set. With this

EZ-KIT Lite, clients can get famil- iar with ADI's ADSP-21262 equipment and programming advancement andrapidly model applications. Theassessmentframeworkisintendedtobe utilized related to the VisualDSP++ 5 im-

5 Approach

For this project, we first began to research on various BLDC motors available in the market. We have chosen the BLDC mo- tor L2444B series of a German company FaulHaber and use the motor driver L6235. We learnt about various optical and mag- netic encoders. Furthermore, we simulated a BLDC motor in Matlab Software and ob- served various parameters such as the de- sired position of motor over time. We also studied various control systems and will be applying them to the fin actuation system and see the output of the simulations and compare it with the existing system and the provement condition to test the abilities of the ADSP-21262 SHARC processors.

The VisualDSP++ improvement condition enables you to perform propelled applica- tion code advancement and troubleshoot, for example,

-Create, accumulate, amass, and interface application programs written in C++, C, and ADSP-21262 get together

-Load, run, step, stop, and set breakpoints in application program

-Read and compose information and pro- gram memory

-Read and compose center and fringe regis- ters

- Plot memory6.1.2 FPGA

Field Programmable Gate Arrays (FPGAs) are semiconductor gadgets that are based around a framework of configurable ra- tionale squares (CLBs) associated through programmable interconnects. FPGAs can be reinvented to wanted application or use- fulness prerequisites in the wake of assem- bling. This component recognizes FPGAs from Application Specific Integrated Cir- cuits (ASICs), which are specially made for explicit structure assignments. ASIC and FPGAs have diverse offers, and they should be cautiously assessed before pick- ing any one over the other. Data prolifer- ates that thinks about the two advances. While FPGAs used to be chosen for lower speed/intricacy/volume plans before, the present FPGAs effectively push the 500 MHz execution hindrance.

Software Description

7.1 *Matlab*

MATLAB is an elite language for special- ized figuring. It incorporates calculation, perception, and programming in a sim- ple to-utilize condition where issues and arrangements are communicated in well- known scientific notation.MATLAB is an intuitive framework whose essential infor- mation component is a cluster that does not require dimensioning. This enables you to take care of numerous specialized figuring issues, particularly those with grid and vec- tor details, in a small amount of the time it would take to compose a program in a scalar noninteractive language, for example, C or Fortran.

The name MATLAB represents network laboratory.This is the arrangement of de- vices and offices that you work with as the MATLAB client or software engineer. It incorporates offices for dealing with the factors in your workspace and bringing in and sending out information. It addition- ally incorporates devices for creating, over- seeing, troubleshooting, and profiling M-documents, MATLAB's applications.

7.2 *NI LABVIEW*

LabVIEW, short for Laboratory Virtual In- strument Engineering Workbench, is a pro- gramming domain in which you make pro- grams utilizing a graphical documentation (associating utilitarian hubs by means of wires through which information streams). Due to LabVIEW's graphical nature, it is characteristically an information introduc- tion bundle.

Yield shows up in any structure you de- sire.Graphical programming wipes out a great deal of the linguistic subtleties re- lated with content based dialects, for exam- ple, where to put your semicolons and wavy braces.Graphical programming enables you to focus on the stream of information in- side your application, since its basic sen- tence structure doesn't dark what the pro- gram is doing. LabVIEW utilizes wording, symbols, and thoughts commonplace to researchers and architects. It depends on graphical images as opposed to printed language to charac- terize a program's activities. Its execution depends on the standard of dataflow, in which capacities execute simply in the wake of accepting the essential information.

Results and Discusions

The figures below show the simulation and its results for rotor position and rotor speed.

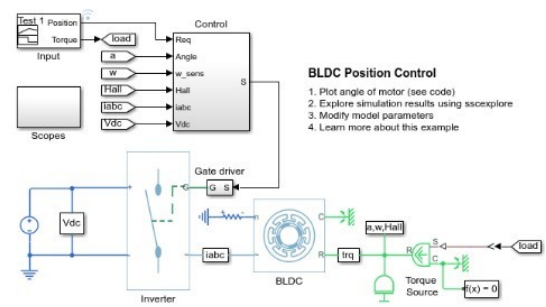

Figure 2:

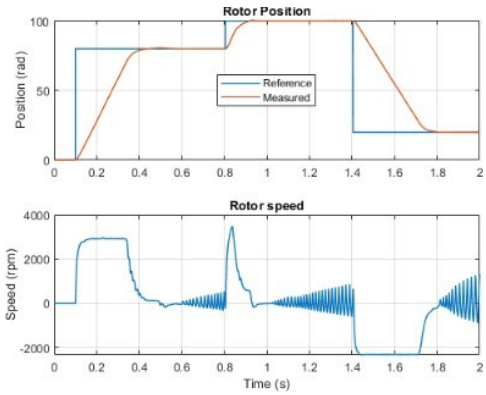

Figure 3:

Conclusions

1]Since BLDC motors have enabled smaller, lighter, cheaper, and more efficient control actuation system (CAS) design than con- ventional brushed DC motors, the company prefers working with BLDC motors.

2]We have studied the simulation of a BLDC motor on MATLAB. We have used MATLAB software for this simulation be- cause this software is of industry standards and it is most preferred software for static and dynamic simulation.

3]The difference between an FPGA and an ADSP board is that FPGA is more efficient than any DSP since it is reconfigurable.

References

1. G Serdar Tombul (2016) Real time control of a fin loading system, Tatranska Lomnica, Slovakia : IEEE .
2. Chung-Hee Yoo, Young-Cheol Lee, Sang-Yeal Lee (2005) A robust controller for an electro-mechanical fin actuator, Boston, MA, USA, USA : IEEE .
3. Murali Muniraj, Ramaswamy Arul- mozhiyal (2015) Modeling and Simulation of Control Actuation System with Fuzzy- PID Logic Controlled Brushless Motor Drives for Missiles Glider Applications, Boston, MA, USA, USA : IEEE .
4. Chang How Lo, Hyo-Sang Shin, Anto- nios Tsourdos, Seung-Hwan Kim (2013) Improving the Performance of an Actua- tor Control Scheme during Saturation, : Springer Berlin Heidelberg.