Automatic Identification of Bottle Leakages by Comparing Pressure Differences

Dr. Ramachandra C G[1] & Nakul Janan[2] & Dr. Ashok B C[3]
[1]Professor and Head, Department of Mechanical Engineering,
Srinivas Institute of Technology, Mangalore-574 143, Karnataka, India
[2]Research Scholar, Department of Mechanical Engineering,
Srinivas Institute of Technology, Mangalore-574 143, Karnataka, India
[3]Professor, Department of Mechanical Engineering,
Viday Vardhaka College of Engineering, Mysuru-570 002, Karnataka, India

Received: April 29, 2018 Accepted: May 30, 2018

ABSTRACT *There is a continually developing requirement for items and advancements that for their realization require hermetically closed components, vessels and tubes. Envelopes with more prominent or smaller vacuum tightness needed to guarantee an acceptable disengagement between outer atmospheres and inside finished or under pressure. Critical leak spots in closed frameworks are typically associations, gaskets, welded and brazed joints, surrenders in material etc. Automation can be characterized as the innovation by which a procedure or technique is performed without human help. Automation has been accomplished by different means including mechanical, water powered, pneumatic, electrical, electronic gadgets and PCs, usually in combination. Bottle leak testing system is an automatic machine. This is a machine which is used to detect the leak in the bottle or can by using the compressed air. The FRL, pressure regulator, connecting valves, cylinders are used in the pneumatic side and PLC, Relay channel in the electrical side. In the bottles manufacturing companies it is important to make sure that bottles are not defective. The common defects that occur in bottles are leaking. The small holes and cracks are the reason for leaking of bottles. So it is difficult to identify by human eyes. The defective bottles lead to the loss of water, oils, medicines that are filled in bottle. For identifying these holes and cracks we have implemented the bottle leakage test machine. It works using compressed air pressure. Fill the bottle with compressed air and keep particular time, after that compare the two pressures. If difference in pressure occurs then the bottle is defective.*

KeyWords- Automation, Bottle Leakage, Compressed Air, Pressure Difference.

INTRODUCTION

Automation can be described as the advancement by which a system or method is performed without human help [01]. As such, Automation or programmed manage, is the usage of different control structures for working gear, for example, equipment, outlines in amassing plants, boilers and warmth treating stoves, exchanging on phone structures, planning and change of vessels, flying machine and unmistakable applications and vehicles with unimportant or diminished human intercession, with two or three frameworks have been completely robotized [02]. Mechanization has been capable by different means including mechanical, electrical, water powered, gas, electronic devices and PCs, as a rule in mix. Convoluted structures, for example, introduce day mechanical workplaces, planes and ships regularly utilize all these joined procedures. The advantage of automation includes incorporate work investment funds, reserve funds in power costs, investment funds in material expenses, and changes to quality, exactness and accuracy [03].

Bottle leak testing system is an automatic machine. This is a machine which is used to detect the leak in the bottle or can by using the compressed air. The FRL, pressure regulator, connecting valves, cylinders are used in the pneumatic side and PLC, Relay channel in the electrical side [04]. This leak testing process also helps for removing some harmful micro objects from the newly manufacturing bottles, because here we using compressed air to fill the bottles for testing process [05]. The compressed air can also used to clean the bottles. Here the pressure which is filled in the can is calculated and compare using the program done in the PLC and the plc will verify whether the bottle contain any type of leak. Here we set 2 bars manually in the pressure transmitter which is used to fill the can. The filling time is set in plc. Here the machine is designed for checking only one bottle at a time. In the bottles manufacturing companies it is important to make sure that bottles are not defective [06]. The common defects that occur in bottles are leaking. The small holes and cracks are the reason for leaking of bottles. So it is difficult to identify by human eyes. The defective bottles lead to the loss of water, oils, medicines that are filled in bottle. For identifying these holes and cracks we implement the bottle leakage test machine [07] . It is working using compressed air

pressure. Fill the bottle with compressed air and keep particular time, after that compare the two pressures. If difference in pressure occurs then the bottle is defective [08].

METHODOLOGY

Following are the steps involved in present work

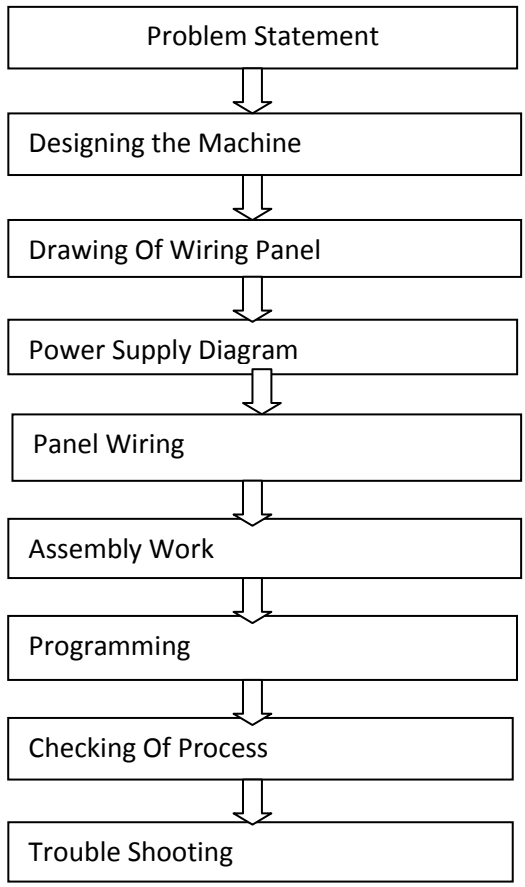

A. Problem Statement

Automation can be described as the advancement by which a system or method is performed without human help. In the bottles manufacturing companies it is important to make sure that bottles are not defective. The common defects that occur in bottles are leaking.

The small holes and cracks are the reason for leaking of bottles. So it is difficult to identify by human eyes. The defective bottles lead to the loss of water, oils, medicines that are filled in bottle. For identifying these holes and cracks we implement the bottle leakage test machine.

B. Designing the Machine

Here we need to design the entire machine. The different parts of the system, mechanical designing, electrical designing and pneumatic designing. This is doing using different software in computer.

C. Drawing of wiring panel

Here we need to draw the panel diagram for the connections. Here we need to mention each and every connection in the system, from where a connection wire is start and where that connection end. We need to mention the starting and ending points of every connection.

D. Power supply diagram

In this step we need to draw the supply diagram. What are the supplies comes in to the machine and their connections to different components.

E. Panel wiring

According to the drawing we need to setup the wiring panel. We have drawing of wiring panel and power supply diagram according to these diagrams we need to wire the circuits. Electrical wiring is an important work. Each and every connection is needed to make perfect.

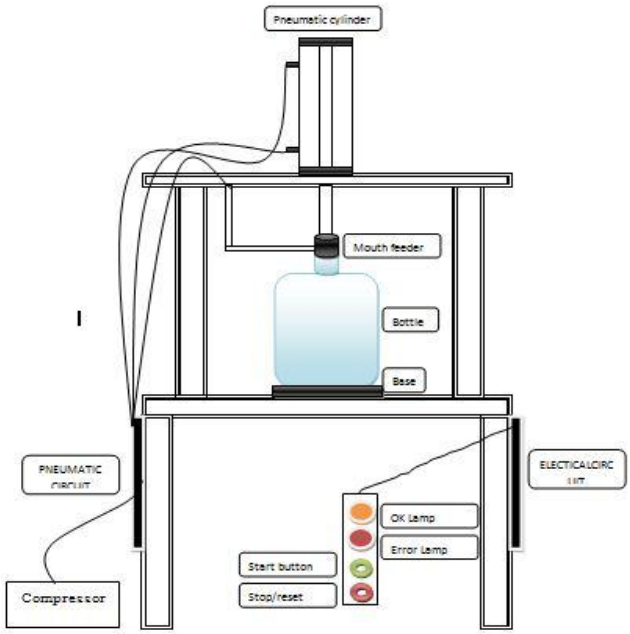

Fig .1 Machine Setup

F. Assembly work

Assemble the components to make the machine. Here based on the design of machine we need to assemble the components of machine. Mechanically we need to check for every joints and fittings of the components.

G. Programming

Write the program for the process using PLC software. We know the working sequence of the machine process, based on that we need o write the PLC ladder program for the process. This is the starting process and this is the last process these things are we need to consider while writing the program. The sequence is need to write one by one based on the working of machine. We use different software for writing the PLC program.

H. Checking of process

Upload the program to PLC and run the program. Check the working of the machine. Here after writing the PLC program for the working of the machine we need to upload the program to the PLC memory. Then simulate the program for checking the working of the machine. Here analyze each steps of the process based on the sequence.

I. Trouble shooting

While simulating the program there may be some problems may occur. We need to identify each and every mistakes in the working and then trouble shoot this mistakes. Here find out the problems occur in the machine process and solve those problems.

FABRICATION OF LEAK TESTING MACHINE

Bottle leak testing system is an automatic machine. This is a machine which is used to detect the leak in the bottle or can by using the compressed air. The FRL, pressure regulator, connecting valves, cylinders are used in the pneumatic side and PLC, Relay channel in the electrical side [09].

Here the pressure which is filled in the can is calculated and compare using the program done in the PLC and the plc will verify whether the bottle contain any type of leak. Here we set 2 bars manually in the pressure transmitter which is used to fill the can. The filling time is set in plc. Here the machine is designed for checking only one bottle at a time [10].

Fig .2 Leak Testing Machine

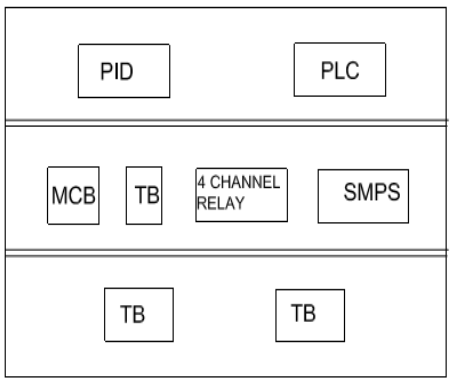

Fig. 3 PLC Model Diagram

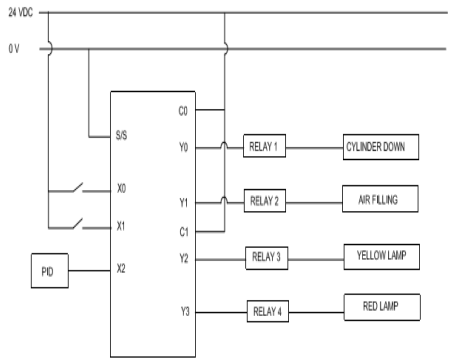

Fig. 4 PLC Line Diagram

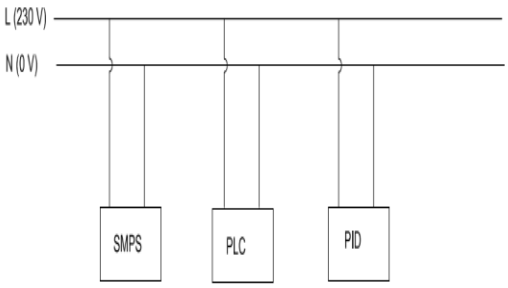

230V

Fig. 4 Supply Diagram

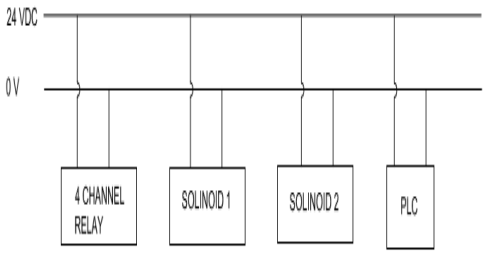

Fig. 5 24V Supply Diagram

RESULTS & DISCUSSIONS

Greater part of the assembling ventures on the planet today utilize assortment of bottle filling plants to take care of with demand. Bottle filling plant can be executed in businesses like medicinal services, pharmaceutical, drinks, Lubrication Oil, consumable oil and so forth. Testing spillage in bottle is a standout

amongst the most conspicuous research territories in assembling industry. This is on account of it controls the general generation cost. A hole implies a unintended break, opening or porosity in an encompassing divider or joint which must contain or reject distinctive liquids and gasses permitting the escape of shut medium. A hole test technique is a quality control venture to guarantee gadget respectability, and is one-time nondestructive test. Air spill testing is a powerful technique for deciding whether an item has been produced to meet release tight details. Infinitesimal openings, fizzled seals, and innumerable different imperfections can cause air releases that can prompt huge issues. This leak testing process also helps for removing some harmful micro objects from the newly manufacturing bottles, because here we using compressed air to fill the bottles for testing process. The compressed air can also used to clean the bottles.

Fig. 6 Machine Diagram

Here the pressure which is filled in the can is calculated and compare using the program done in the PLC and the plc will verify whether the bottle contain any type of leak. This technique comprises of pressurizing the framework with a high weight gas, typically dry air or nitrogen. At that point the part is secluded from the gas supply and, after a balancing out period, its inner weight is checked after some time. The weight drop is measured utilizing weight transmitter in a specific time. In the event that the weight in the framework drops quick, there is an extensive release exhibit in that part or segment of the framework. In the event that the framework's weight drops gradually, there is a little release exhibit. On the off chance that the weight continues as before, that segment is leak free.

I. CONCLUSIONS

The main objective of this work is to find out the defects in the water can. I have made a demo version of the original machine in R&D department. Using this demo machine the company was made the original one for the international client of the company. They purchase the machine for water can leak testing in gulf country. In gulf countries they mainly use the water cans for drinking purpose. So the machine is very helpful for the water can filling company. They can easily check the leakage in the bottle using this machine. It will help to increase their productivity and their profit. The machine reduces the time consumption for leak testing and reduces the labor costs. Bottle leak testing system is an automatic machine. This is a machine which is used to detect the leak in the bottle or can by using the compressed air. The FRL, pressure regulator, connecting valves, cylinders are used in the pneumatic side and PLC, Relay channel in the electrical side. This leak testing process also helps for removing some harmful micro objects from the newly manufacturing bottles, because here we using compressed air to fill the bottles for testing process. The compressed air can also used to clean the bottles.

REFERENCES

1. L.A. Bryan and E.A. Bryan, "Programmable Controllers".
2. "Theory and Implementation", Industrial Text, Chicago, IL, 1988,pp. 20 – 40.
3. K. Erickson, "Programmable Logic Controller", Wiley-IEEE,1996,
4. Vtech Cool Innovation "Leak Detection Methods: A Comparative Study of Technologies and Techniques"
5. Cosmo instruments Co.LTD "The Advantages of Using Air Leak Testers"
6. Andrej Pregelj and Marjan Drab, "Leak Detection Methods And Defining The Sizes Of Leaks"
7. Austin Weber, " Advanced Leak Test Methods, Assembly Magazine"
8. Hans Rottländer, Walter Umrath and Gerhard Voss, "Fundamentals of leak detection"
9. TASI Group: Bonfiglioli Engineering and Sepha. "Leak Testing Machine For Filled Bottles"
10. Prof. Sanjay Bhavsar, Nikhil Gupta, Shalin Shah and Prashant Khandelwal." Bottle Filling With Leakage Test & Packaging