Power Management System

Dr. Ramachandra C G[1] & Jubin Justin [2] & Dr. Nataraju S N[3]
[1]Professor and Head,Department of Mechanical Engineering,Srinivas Institute of Technology, Mangalore-574 143, Karnataka, India
[2]Research Scholar,Department of Mechanical Engineering,Srinivas Institute of Technology, Mangalore-574 143, Karnataka, India
[3]PAsrofessor,Department of Mechanical Engineering,S.J.C Institute of Technology, Chickballapur-562 101, Karnataka, India

Received: April 29, 2018 Accepted: May 30, 2018

ABSTRACT *Power management system framework undertaking will give you to create and determine the most efficient, cost sparing, and full-robotized control administration framework helpful for now. So as to build up this application we will indicate significant equipment required to build up a full included power administration framework. This venture totally includes in the observing of different parameters of power system and gives sign and control to the same. The undertaking depends on the way that there is wide distinction in the measure of cash that modern purchasers need to pay when the Maximum Demand goes up even by a little amount(i.e., when the chunk cut off is come to). In this manner this is an endeavor to lessen the power bill of shoppers drawing huge power from the power board. The exhibit module comprises of a Hardware part and a Software part that is utilized to program a PLC to accomplish the coveted outcomes. There are 16 lights speaking to different burdens and they can be relegated needs utilizing PLC programming. The Maximum Demand set point can likewise be appointed utilizing PLC program from the SCADA. In the programmed mode, once the Maximum request is surpassed, the lower need lights will be turned off consequently and no more lights can be exchanged on by the client, unless the aggregate power in the circuit is not as much as the set point. In the event that the aggregate power is lesser than the set point, lights can be consistently exchanged on till the breaking point is come to, and when this happens the PLC does not give the client a chance to switch on a heap. However in Manual mode, no influence over the power in circuit is conceivable, yet a SCADA sign will be accessible.*

Keywords: *Power Management System, Automation, PLC, SCADA.*

Introducion

A power management system, as the name recommends, is a technique for successfully dealing with the power utilization in an industry. Power administration framework is of key significance as there is grave vitality emergency with the interest for surpassing the supply [01]. Our task is for the most part in light of the reality there is wide contrast in the measure of cash that individual customers need to pay when the greatest request goes up even by a little sum. Nonstop checking and slicing off energy to types of gear or to parts of a plant or industry when not required is the rule behind power administration frameworks [02].

The framework is controlled by a Programmable Logic Controller (PLC) and has a Supervis ory Control and Data Acquisition (SCADA) interface for administrator use in the control room. The PLC can be adequately utilized for the computerization of electromechanical procedures, for example, control of apparatus in an industry [03]. It is intended for different information and various yield game plans. The SCADA gives the fundamental sign to the administrator.

The essential thought behind the power administration venture is to deal with the power in different burdens. The need of disengaging is variable and can be changed every once in a while. The heaps are appointed distinctive needs by the PLC. The most extreme request is likewise set in the PLC [04]. In the programmed mode, once the most extreme request is surpassed, the lower need burdens will be turned off consequently and no more loads can be exchanged on by client, unless the aggregate power in the circuit is not as much as the set point. On the off chance that the aggregate power is lesser than the set point, burdens can be constantly exchanged on till the cutoff is come to, and when this happens the PLC does not give the client a chance to switch on a heap [05]. However in manual mode, no influence over the power expended in circuit is conceivable, yet a SCADA sign will be accessible.

Methodology

- It consists of nine incandescent lamps which represents nine different loads in an industry.
- These lamps are controlled by the nine input switches. The loads are divided into three sections each consisting of three loads. These can be controlled by the switches provided for each subsection.

- There are two ON and Off push buttons for the main supply and a mains indicator.
- There is a toggle switch for the automatic or manual mode selection. The switching on and off of lamps are controlled with the help of relays.
- The 230v mains supply is converted to 24v dc supply using the SMPS (Switched Mode Power Supply).

The -24v dc is connected as common to the input side. The +24v dc is connected to each switch. Whenever a switch is ON that particular input becomes high..The +24v dc is connected as common to the output side [06]. The -24v dc is connected to the relay energizing coil. The output turns high according to the input conditions and also according to the conditions in the program. When an output turns high the relay connected to that output gets energized and the required load gets connected to the 230v mains supply

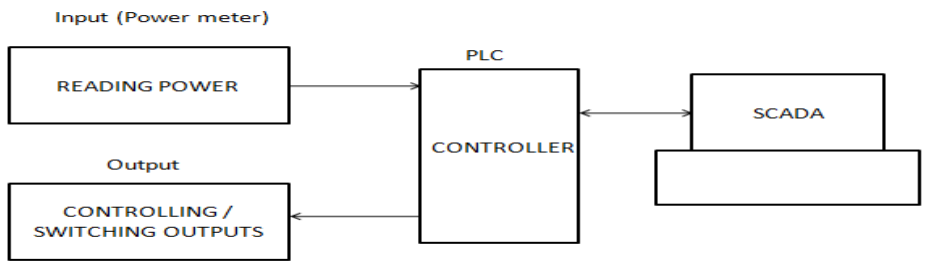

Figure 1 Blockdiagram

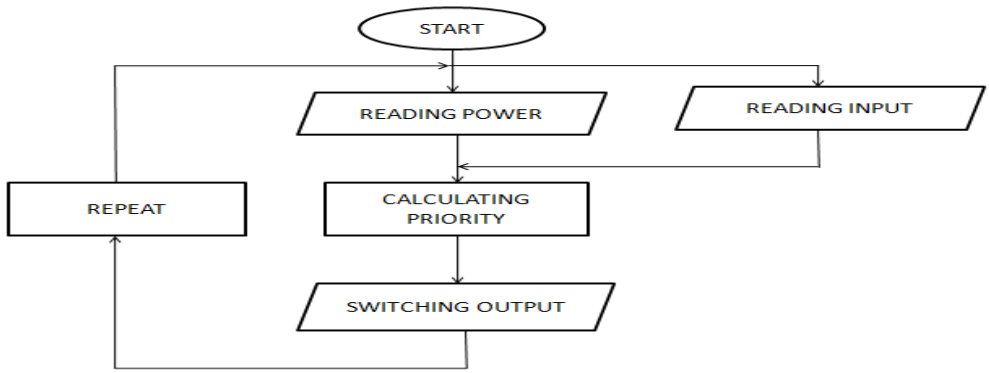

Figure 2 Flow chart

A. Problem Statement

Power Management Instruments (PMI) a Turkish business company of the technology ferm, decided to the design and production of high frequency power conversion systems. Its offer consists of transformers, UPS units, voltage regulators, and battery chargers, among other electronic products. Besides, PMI develops customized projects for industries of oil & gas, petrochemical, mining, process industry, power transmission and distribution, and health sectors. PMI group was created in 1986, and it is integrated by the companies ORTADOGU Elektronik Sanayi Ltd., KARMET Makina Elektronik Tasarim A.S. and PMI Elektrik ve Elektronik Sistemleri Dis Tic. Ltd. The Sales and Marketing office is located in Istanbul, the processing plant is in Ankara, and distribution networks operate along three continents.

B. Designing the Machine

Here we need to design the entire machine. The different parts of the system, mechanical designing, electrical designing and pneumatic designing. This is doing using different software in computer.

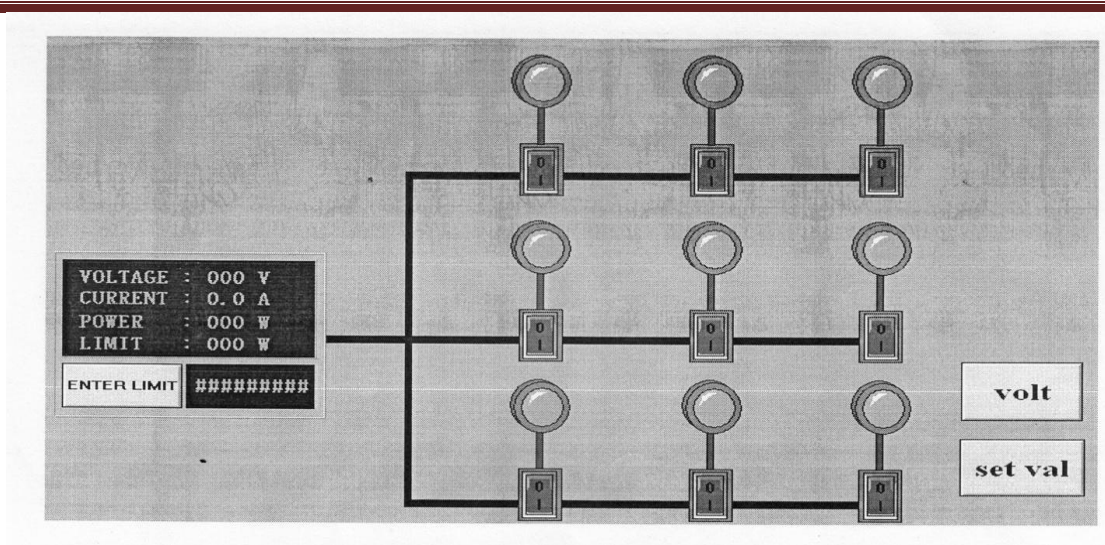

Figure 3 Machine Design

C. Drawing of wiring panel

Here we need to draw the panel diagram for the connections. Here we need to mention each and every connection in the system, from where a connection wire is start and where that connection end. We need to mention the starting and ending points of every connection.

D. Power supply diagram

In this step we need to draw the supply diagram [07]. What are the supplies comes in to the machine and their connections to different components.

E. Panel wiring

According to the drawing we need to setup the wiring panel. We have drawing of wiring panel and power supply diagram according to these diagrams we need to wire the circuits. Electrical wiring is an important work. Each and every connection is needed to make perfect.

F. Assembly work

Assemble the components to make the machine. Here based on the design of machine we need to assemble the components of machine. Mechanically we need to check for every joints and fittings of the components.

G. Programming

Write the program for the process using PLC software. We know the working sequence of the machine process, based on that we need o write the PLC ladder program for the process. This is the starting process and this is the last process these things are we need to consider while writing the program [08]. The sequence is need to write one by one based on the working of machine. We use different software for writing the PLC program.

H. Checking of process

Upload the program to PLC and run the program. Check the working of the machine. Here after writing the PLC program for the working of the machine we need to upload the program to the PLC memory. Then simulate the program for checking the working of the machine. Here analyze each steps of the process based on the sequence.

I. Trouble shooting

While simulating the program there may be some problems may occur. We need to identify each and every mistakes in the working and then trouble shoot this mistakes. Here find out the problems occur in the machine process and solve those problems.

FABRICATION OF PMS

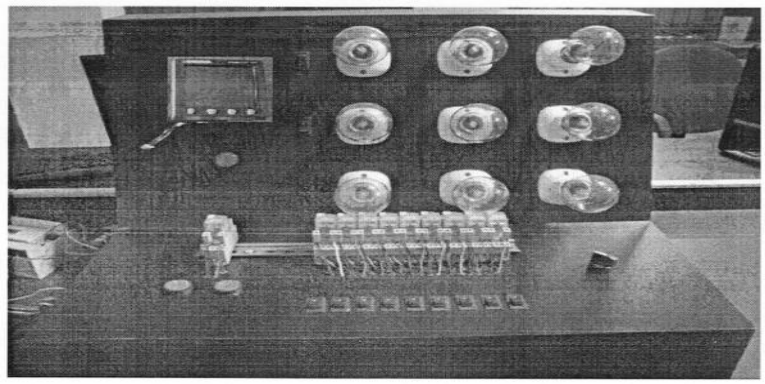

Figure 4 Fabrication of PMS

It consists of nine incandescent lamps which represents nine different loads in an industry. These lamps are controlled by the nine input switches [09]. The loads are divided into three sections each consisting of three loads. These can be controlled by the switches provided for each subsection. There are two ON and OFF push buttons for the main supply and a mains indicator. There is a toggle switch for the automatic or manual mode selection. Switching on and off of lamps are controlled with the The overall connection diagram is shown in figure 5.2. The 230v mains supply is converted to 24v dc supply using the SMPS (Switched Mode Power Supply).

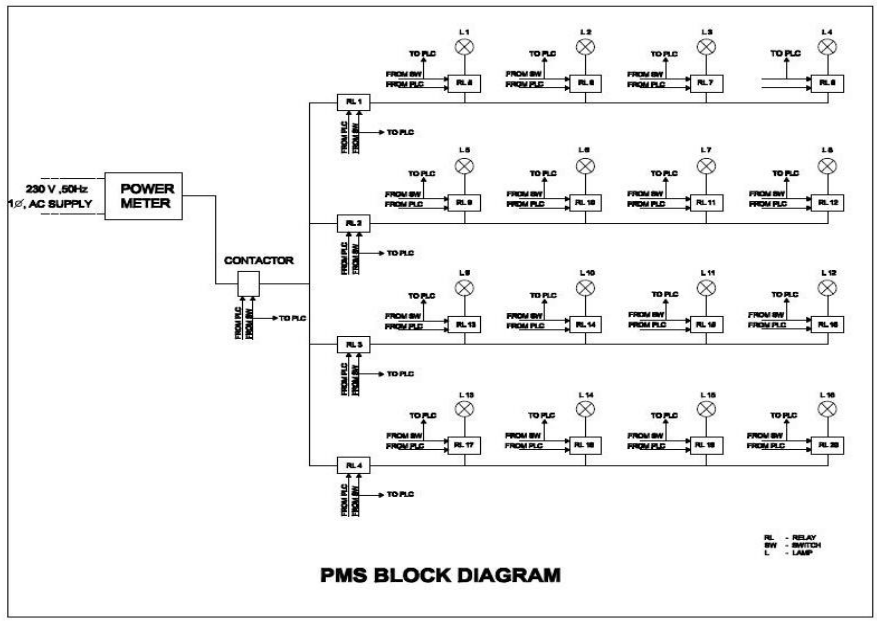

Figure 5 Over Connection Diagram

The -24v dc is connected as common to the input side. The +24v dc is connected to each switch. Whenever a switch is ON that particular input becomes high.

The +24v dc is connected as common to the output side. The-24v dc is connected to the relay energizing coil. The output turns high according to the input conditions and also according to the conditions in the program. When an output turns high there lay connected to that output gets energized and the required load gets connected to the230v mains supply [10].

RESULTS & DISCUSSIONS

The essential thought behind the power administration venture is to deal with the power in different burdens. The need of detaching is variable and can be changed occasionally. The heaps are relegated diverse needs by the PLC. The most extreme request is additionally set in the PLC. In the programmed mode, once the Maximum request is surpassed, the lower need burdens will be turned off consequently and no more load can be exchanged on by client, unless the aggregate power in the circuit is not as much as the set point.

In the event that the aggregate power is lesser than the set point, burdens can be constantly exchanged on till the breaking point is come to, and when this happens the PLC does not give the client a chance to switch on a heap. However in Manual mode, no influence over the power devoured in circuit is conceivable, yet a SCADA sign will be accessible.

CONCLUSIONS

In this project a suitable program control stepping stool chart for control Management System was made. Moreover, fitting SCADA programming with the program to control and screen the framework from a main issue was figured it out. The informing amongst practically equivalent to and advanced information, SCADA and PLC was accomplished effectively. A standout amongst the most critical parts of any industry is the power administration framework. A few procedures can be executed to deal with the power in an industry. The technique that must be utilized depends on differed targets like predominant quality, expanded productivity, high benefit and essentially control administration. With the prime goal of taking into account these necessities and the requirements of the modern segment, noteworthiness has been offered here to robotization. Accentuation has been given to the robotization procedure that is currently quickly having its spot in every one of the businesses over the globe.

REFERENCES

1. Stuart A. Buyer, “SCADA: Supervisory Control and Data Acquisition”, 3rd end, NorthCalolina: ISA, 2004.
2. M Zima, T Krause, G Anderson, "Evaluation of system protection schemes, wide area monitoring and control systems", in Proc. 2003, Sixth International Conference on Advances in power system control, operation and management.
3. J Borsch, M Zima, A Sunray, C Carnal, C Rehtanz,"Expeiences with and perspectives of the system for wide area monitoring of power systems", Quality and Security of Electric Power Delivery Systems, 2003, CIGRE/IEEE PES International Symposium.
4. W.Bolton, “Programmable Logic Controllers”, 4th end, North Carolina: Elsevier Newnes, 2006.
5. Radanovich, M. Green, T.C, "High-Quality Power Generation through Distributed Control of a Power Park Micro grid" in IEEE Transactions on Industrial Electronic.
6. Bernard, J.-P., Durocher, D., “An expert system for fault diagnosis integrated in existing SCADA system”, Power Systems, IEEE Transactions on , Volume: 9 , Issue: 1 , Feb. 1994Pages:548 - 55-4
7. Bruce, A., Leg R.,” A framework for the specification of SCADA”. Data links, Power Systems, IEEE Transactions on, Volume: 9, Issue: I, Feb. 1994 Pages: 560 – 564
8. Gosh/, K., Douglas, L.D., “GUI display guidelines drive winning SCADA projects, ComputerApplications improver”, IEEE, Volume: 7, Issue: 2, Api.llgg4Pages:39 – 42
9. Gaskell- D...1., Relock, W.R-, “SCADA communication techniques and standards- computer applications in power”, IEEE, Volume:6 ,Issue: 3 , July 1993 pages:45 – 50
10. Chan, E.-K., Ebenhoh, H.,”The implementation and evolution of a SCADA system for alarge distribution network”, power systems, IEEE Transactions on , volume: 7 , Issue: 1, Feb.1992 Pages:320 -326