URL. : http://ijrar.com ISSN 2349 - 5138 E - ISSN 2348 - 1269

An open Access, peer reviewed, refereed, online and print research journal

International Journal of Research and Analytical Reviews

UGC Approved Research Journal

Periodicity - Quarterly

Atman Publishing Academy

International Journal of Research and Analytical Reviews
Atman Publishing Academy
2061-C/2/B, Nr. Adhyatma Vidya Mandir, Sanskar Mandal, Bhavnagar-364002.
Contact : 9427903033 E mail : editorsijrar@gmail.com, ijrar1@gmail.com

International Journal of Research and Analytical Reviews
ijrar.com

© IJRAR - All rights reserved. Reproduction in any form is strictly prohibited.
This work is licenced under Creative Commons International Licence Attribution 4.0 E-version.

Rs. 900

Subscription	1 year	2 years	5 years
Individual	3,000	6,000	15,000
Institutional	4,000	8,000	40,000
Advertisement	1000/Black	3000/colour	Per Page

Send your Paper(s)/Article(s) and Contact us on any one of following

E mail: (1) editorsijrar@gmail.com (2) ijrar1@gmail.com (3) drrbjoshi@ijrar.com

Contect No.: +91 9427903033

1. Thoughts, language vision and example in published research paper are entirely of author of research paper. It is not necessary that both editor and editorial board are satisfied by the research paper. The responsibility of the matter of research paper/article is entirely of author.
2. Editing of the IJRAR is processed without any remittance. The selection and publication is done after recommendations of at least two subject expert referees.
3. In any condition if any National/International University denies accepting the research paper/article published in IJRAR, than it is not the responsibility of Editor, Publisher and Management.
4. Only the first author is entitle to receive the copies of all co-author.
5. Before re-use of published research paper in any manner, it is compulsory to take written permission from the Editor – IJRAR, unless it will be assumed as disobedience of copyright rules.
6. All the legal undertakings related to IJRAR is subject to Bhavnagar Jurisdiction.

Editor
International Journal of Research and Analytical Reviews
Atman Publishing Academy
2061-C/2/B, Nr. Adhyatma Vidya Mandir, Sanskar Mandal, Bhavnagar-364002.
Contact : 9427903033 E mail : editorsijrar@gmail.com, ijrar1@gmail.com

URL. : http://ijrar.com ISSN 2349-5138 E-ISSN 2348-1269

An open Access, peer reviewed, refereed, online and print research journal

Editor in chief

Dr. R. B. Joshi

Senior Advisory Board

Dr. H. O. Joshi Retd. Prof. & Head, Department of Education, Saurashtra University, Rajkot, Gujarat.	**Dr. Bhavesh Joshi** Associate Professor College of Food Processing Technology & Bioenergy, Agricultural University, Anand – 388110, Gujarat	**Vasantkumar Pathak** Director, Pathak Group of Schools & College, Rajkot.

Editorial Board

Prof. (Dr.) Ami Upadhyay Director, Department of Humanities And Social Sciences, Dr. Babasaheb Ambedkar Uni. A'Bad.	**Dr. Awa Shukla** Asst. Professor & Director, Social Sciences Dept. Babasaheb Ambedkar Open University, Ahmedabad.	**Dr. Dushyant Nimavat** Associate Professor Department of English, Gujarat Uniersity, Gujarat, India
Dr. A. Heidari Faculty of Chemistry California South University (CSU) Irvine, California, **U. S. A.**	**Dr. Bharat Ramanuj** Professor & Head, Department of Education, Saurashtra University, Rajkot.	**Dr. Nahla Mohammed Abd El-Aziz** Assistant professor - Entomolog Department, Faculty of Science Cairo University, **Egypt.**
Dr. Manahar Thaker Principal G. H. Sanghavi college of Education, Bhavnagar, Gujarat.	**Dr. K. S. Meenakshisundaram** Director, C. A. A., Great Lakes Institute of Management, Chennai	**Dr. J. D. Dave** I/c Principal P.D. Malviya Graduate Teachers' College, Rajkot, Gujarat.
Dr. M. B. Gaijan Associate Professor, Shamaldas Arts College, Bhavnagar.	**Dr. A. K. Lodi** H.O.D. Faculty of Education, Integral University, Lucknow(UP)	**Dr. Trupti Pathak** Assistant Vice Precident(Tech.) Claris life Sciences, Ahmedabad. Gujarat.
Dr. K. Ramadevi Associate Professor Department of Civil Engineering Kumaraguru College of Technology, Coimbatore, Tamilnadu.	**Dr. Jayant Vyas** Professor & Head, Department of Education, M. K. Bhavnagar University, Bhavnagar	**Dr. Dilip D. Bhatt** Associate Prof. & Head, Department of English, V. D. K. Arts college, Savarkundla, Gujarat.
K. S. Dave Lecturer J. H. Bhalodia Women's College Rajkot, Gujarat.	**Dr. Anil Ambasana** Retd. Prof. & Head, Department of Education, Saurashtra University, Rajkot. Gujarat.	**Dr. Sandeep R. Sirsat** Associate Professor & Head, Department of Computer Science, Shri Shivaji Science & Arts College, Chikhli, Dist: Buldana (M.S.-India)

International Journal of Research and Analytical Reviews

URL. : http://ijrar.com ISSN 2349-5138 E-ISSN 2348-1269

An open Access, peer reviewed, refereed, online and print research journal

Review Committee

Editor & Head of Review Committee

Dr. S. Chelliah
Professor & Head,
Dept. of English and Comparative Literature,
Madurai Kamraj University, Madurai-21, **India.**

Mr. Zeeshan Shah Senior Lecturer, Department of Multimedia and Communication, University College of Bahrain, **Kingdom of Bahrain**.	**Dr. Samira Shahbazi** Plant Protection & Biotechnology Research Group, Nuclear Agricultural Research School, Nuclear Science & Technology Research Institute (NSTRI), **Iran**	**Dr. Belal Mahmoud Al-Wadi** Lecturer, University of Dammam (Saudi Arabia), Founder & Vice President of the Jordanian Society for Business Entrepreneurship **(Jordan)**
Harish Mahuvakar Associate Professor & Head, Dept. of English, Sir P. P. Institute of Science, Bhavnagar, Gujarat, **India.**	**Dr. Mainu Devi** Assistant Professor (Sr. Grade) in Zoology, Diphu Govt. college, Karbi Anglong – Assam **India.**	**Asim Gokhan YETGIN** Assistant Professor, Faculty of Engineering, Dumlupinar University, Kutahya**,** **Turkey.**
Dr. A. Kusuma Assistant Professor, Department of Social Work, Vikramasimhapuri University, Nellore.(AP)	**Prof. Rajeshkumar N. Joshi** I/C Dean, Faculty of Arts & Humanities, C. U. Shah University, Gujarat, **India.**	**Sunita. B. Nimavat** Assistant Professor of English, N.P.College of Computer & Mgt., Kadi (North Gujarat).
Nahla Mohammed Abdelazez Assisstant Professor Faculty of Science, Cairo University, Giza Governorate, **Egypt.**	**Dr. Riyad Awad** Associate professor, Structural Engineering, An - Najah National University, Nablus, **Palestine.**	**Dr. Amer A. Taqa** Professor Dept. of Dental Basic Science, College of Dentistry, Mosul University, Masul, **Iraq.**

International Journal of Research and Analytical Reviews

Special Issue of

"TECHNO2K19"

Department of Electronics and Telecommunication Engineering

Marathwada Mitra Mandal's College of Engineering

Karvenagar, Pune 411052

"येथे बहुतांचे हित"

Celebrating 50 years of Academic Excellence

Marathwada Mitra Mandal, Pune

International Journal of Research and Analytical Reviews

Volume: 06 Special Issue May 2019

Contents

1 **Water Dispenser System (Water ATM)**
Arati Godase, Sneha Barapatre, Samruddhi Bhujbal , Prof. Snehal Koparde 1 - 4

2 **Iot based Industrial Automation**
Kedar Gopale, Sujata Bhise, Viki Waghmare, Prof. D. N. Parkhi 5 - 10

3 **Stimulation and Bio Feedback Using EMG Signal Targeting Urinal and Gynaec Muscles**
Mervyn Vaz, Hrishikesh Joshi, Pranav Auti, Prof. Manisha I. Agnani 11 - 15

4 **IOT Based System for Remotely Controlling Digital Signage**
Adesh Kankhar, Chirag Borole, Sujit Ghule, Prof. A. J. Nimbalkar 16 - 20

5 **IOT Based Smart Irrigation System using Raspberry Pi**
Kajol Mane, Payal Lingampalle, Shubhangi Wakure, Prof. A. G. Dakre 21 - 25

6 **IOT Based Vehicle Accident and Tracking System**
Aboli Maske, Priya Oak, Jayshri Uge, Prof. Anup Dakre 26 - 29

7 **Smart Water Monitoring and Distribution System Based on IOT**
Jyoti Ghotale, Rutuja Bhuvad, Supriya Jadhav, Prof. Harashda Burande 30 - 35

8 **Demonstration of Intelligent Cooperative Vehicles**
Chaitanya Kulkarni, Viraj Mete, Pooja Dhumal, Prof. Disha Parkhi 36 - 41

9 **Sprinkler Automation for Accurate Pest Control on Crops**
Mohini Kesare, Shital Domle, Sumit Rajegore, Prof. V. B. Deokamble 42 - 45

10 **Image Text to Speech Conversion Using Raspberry PI**
Mrunali Garud, Abhishek Dodke, Vaibhav Nirphal, Prof. M. R. Pangaonkar 46 - 50

11 **Smart Ration Distribusion System using IOT**
Kishor Kaushalye, Pankaj Gadade, Madhan Madhu, Prof. V. B. Deokamble 51 - 56

12 **IOT Based Smart Home Automation and Security System Using Android App**
Priti Pathak, Sheetal Patule, Shubhada Kulkarni, Prof. R. R. Malekar 57 - 62

13 **IOT based LPG Cylinder Monitoring and Booking System**
Priyanka Shinde, Snehal Kamble, Viraj Tamhane, Prof. A. G. Dakre 63 - 66

14 **IOT based Surveillance Bot to Improve Security**
Shubham Bartakke, Tejal Deshpande, Vikram Awate, Prof. S. J. Koparde 67 - 72

15 **Image Processing Based Automatic Painting Robot using Raspberry Pi**
Vishal Nevase, Yash Pandya, Harshali Shaha, Prof. Anagha Kunte 73 - 78

16 **Automated Arm for Harvesting Tomato in Greenhouse**
Neha Kulkarni, Rishikesh Ramdasi, Vishakha Phirke, Prof Shubhangi Joshi 79 - 84

17 **Automated Solar Grass Cutter With Robotic Arms**
Maitreyee Shukla, Shiwanee Sonawane, Shruti Vaidya, Prof. Sampada Tavse 85 - 91

18	**Economical Ankle Brachial Index Monitoring System** Kunal Satav, Mrunmayi Jawadekar, Pradnya Kondhekar, Prof. R. R. Malekar	92 - 95
19	**Automatic Shiftable Road Divider** Akash Korke, Disha Patil, Dipali Wakure, Prof. Vishal Salve	96 - 100
20	**Object Detection for Unmanned Aerial Vehicles using SSD Mobilenet** Nikhil Nagarkar, Pranil Angre, Mahesh Arangale, Prof. Disha Parkhi	101 - 105
21	**Electric vehicle using renewable sources** Gaurav Sonawane, Hitesh Bachhav, Kundan Patil, Prof. M. R. Pangaonkar	106 - 110
22	**ASTRO: An Old Age Assistant Bot With Fitness Band** Astha Mattoo, Sakshi Kulkarn, Siddesh Mandhare, Prof. Harshada Burande	111 - 114
23	**Smart Intelligent Two Axis Robotic Simulator** Aishwarya Lande, Akshay Havaldar, Shiwani Fuse, Prof. R. R. Malekar	115 - 118
24	**IOT based Wizard Chessboard** Yashraj Hawle, Aishwarya Zade, Bharat Dixit, Prof. Shubhangi Joshi	119 - 124
25	**Smart and Energy Efficient Power Saving System** Pooja Kad, Pratiksha Gadam, Saurabh Khotare, Prof. Mrs. Sampada Tavse	125 - 130
26	**Android Application Based Smart Pet Feeder Using IOT** Gauri Narendra Bhale, Tejal Shirish Deshpande, Akash Sanjay Arve, Prof. Shubhangi A Joshi	131 - 135
27	**Speaking System For Mute People Using Hand Gesture** Ashwini Shinde, Prajakta Karale, Riya Patel, Prof. Priya Sawant	136 - 141
28	**Automatic Robo Vehicle System for Military Border Area** Shubham Amrutkar, Rahul Harishchandre, Pranay Khadgi, Prof. Mrinalini Pangaonkar	142 - 146
29	**Automatic Rising Bollards for BRT Lanes** Suyog Korpe, Pratik Shirode, Mahesh Bothe, Prof. S. N. Deshmukh	147 - 151
30	**Implementation of PCB plotter based on CNC machines using Arduino** Akshata Mulik, Dattatraya Patil, Mrunmayee Mirashi, Prof. Harshada Burande	152 - 158
31	**Sign Language Translator** Shrijit Pendse, Harshal Chaudhari, Devesh Vaidya, Pranjal Gunja, Prof. Manisha Dudhediya	159 - 165
32	**Attendance System Using Face Recognition** Ashish Kulkarni, Nihar Chandorkar, Prasad Natu, Prof. S. N. Deshmukh	166 - 169
33	**Vending Machine Using Arduino** Pooja Jadhav, Rushikesh Jadhav, Dilshad Sheikh, Prof. Anagha Kunte	170 - 175
34	**Smart Classroom System Based on IOT** Daghale Prasad, Khune Prasad, Yalamgonde Yogeshwar, Prof. Vishal Salve	176 - 180
35	**Vehicle Tracking and Accident Detection System Using F. P. G. A.** Sheeba Mathew[#1], Emily Esther Kurian[#2], Anshul Pandita[#3], Anuj Jagtap[#4]	181 - 185

36	**"Smart USB Cable"** Ms. Kajal P Ramteke, Ms. Yogita B Gaikwad, Ms. Pooja D Khairnar, Prof. P. R. Shah	186 - 191
37	**IOT Based Bridge Condition Monitoring System** Abhishek Girigosavi, Ashwini Jalgi, Rohit Kotgire, Prof. Sampada Tavse	192 - 194
38	**IOT Based Tire Pressure Monitoring, Vehicle Parameter Monitoring and Vehicle Security** Rushabh Surana, Udayan Bhide, Pradip Yadav, Prof. Snehal Koparde	195 - 198
39	**"Air Pollution Monitoring System Using Lab View"** Pravin Dukare, Pratiksha Baglane, Mohini Baglane, Prof. Vasant Deokamble	199 - 203
40	**Bomb Disruptor Using an Electromagnetic Pulse** Soham Athavale, Viraj charwad, Prof. Anagha Kunte	204 - 209
41	**IOT Based Adaptive Traffic Congestion Control** Aksa Mary Pramod, Umang Mehta, Soham Shirwadkar, Anushka Sankpal -	210 -213

Water Dispenser System (Water ATM)

Arati Godase[1], Sneha Barapatre[2], Samruddhi Bhujbal[3] ,Prof. Snehal Koparde
Authors of Department of Electronics and Telecommunication Engineering,
Marathwada Mitra Mandal's College of Engineering,
Savitribai Pune University, Pune, India

ABSTRACT: *Water scarcity is one of the major problem which the major cities are facing across the world. As we know that big area of surface of Earth is covered with water. But only less amount of water is used for the daily use. Scientists have been searching for many techniques to make sources of water to be used in daily routine. Due to shortage of water it is suppose to make water reach in many small places from creating dams and electricity. Most commercial products trending is water. Now a day's vending machines (dispenser machine) are available and are operated with the help of only single coin. But our will is to make water dispenser machine(Water ATM) which will be operated on different coins as well as it will operated by using Mobile app.*

Keywords: *Water resources practical water dispenser, circuit design, water release time, flow rate, pushing button, water filling action, water dispenser overflows, Saving water, Flow Sensor, Solenoid Valve, Coin Acceptor*

1. Introduction

In these day's Water dispenser machines (Vending machine) are accessible and are operated with the help of only single coin. But our will is to design water dispenser system which can be operated on various coins. In our country there is big issue of safe drinking water and also distribution of water therefore we are going to provide this system. Water is most commercial product in these century. The increasing burden on the different resources of water is a result of a large amount of factors. On the one hand, there is increased need of fresh water because of rising population and changing . If costs were considered, it would be easily to provide in rural area. The problem is somewhat similar to allocation of poor water, False water management and use of water insufficiently.

In this water Dispenser machine is going to be developed in such a way that water will get served to the customers. The mechanism of coin acceptor is to insert coin of Rs.1, Rs.2, Rs.5 and Rs.10 into the machine. Sensor are useful to develop the coin acceptor which can be works on different.In most of the countries at public places dispenser machine has been situated. Coin operated machine is been invented in London. Basically ,use of system was used to dispense post card. The costumer is able to get required quantity of product by inserting coins in vending machine through coin acceptor.

2. Literature Survey

I. **"Study of Automatic Water Dispenser " :** This system implemented is possible to detect level of water in water tank,when the switch is on then tanks get empty and when the switch is off then tanks get full. Microcontroller is being interface with LCD to show the level of water, the temperature of the water and automatic procedure of water helps human beings, that without any human interface to the water tap. They are getting enough, pure and temperature-controlled water. Shubham Dwivedi, Sourabh Bhardwaj [1].

II. **"Automatic water dispenser along with mobile charging" :** This system is very useful to people who are all using mobile phones without charging condition in public places so that they can reactive a low battery or a dead battery by simply plug in and charge it for Rs.1.They have designed coin based water dispenser machine which will going to vend water according to the desired amount. Chitra Nandanwar, Deeksha Raut [2].

III. **"Real Time Embedded based Drinking Water Vending Machine":** This system, coin discriminator is the mechanism of this coin dispenser used to insert different coins of Rs.1, Rs.2, and Rs.5 into the machine. The mechanism used in optical mouse sensor will generate different signals for different coins to be inserted in coin discriminator. The water will be saved after the desired quantity of water is provided into the water container with the help of surface sensor so the wastage of water will be reduced. Astha Shrivastva, Sasikala [3].

IV. **"Coin operated Water Dispenser":** This system uses pumping of water implemented by a device is known as DC Submersible water pump. It removes water is being removed by mechanical action.

e ISSN 2348 –1269, Print ISSN 2349-5138
Marathwada Mitra Mandal, Pune

Water pump can drive with help of transistor. Controller passes the signal to the water pump to starts its operation when container is present and coin is detected. Prof. A. A. Shinde, Rajdeep Ghosh [4].

V. **"Research and Development of Practical Water Dispenser":** The Practical Water Dispenser adopts the 8052 Micro Controller Unit program control in the circuit design to control the water release time and flow rate of the high-temperature boiled water and low-temperature boiled water and mix the high-temperature boiled water with the low-temperature boiled water to achieve temperature of boiled water and required amount by users. At the same time, the original function of releasing water by pushing button is retained and a voice prompt is provided when the water filling action is completed. When the water from water dispenser overflows the cup, the water filling would be stopped automatically without water waste. It can actually achieve the purposes of convenient and practical use and water saving. Chin Jung Huang, Fa Ta Tsai. [5]

3. Proposed Work

Here we looking forward a fully automated coin-based water dispenser system involves microcontroller and sensor. The system is able of fully automated water, soft drinks etc. dispensing based on motors and sensors. The system also senses if container is placed at the counter to avoid water wastage if there is no container placed at the counter panel. The system also uses IR sensors which is used to detect presence of container and signal is send to microcontroller and the microcontroller processes further the information that is sent by sensors to detect the water presence. This system is also having a coin detector which is used to sense as well as send information of particular coin to microcontroller. When the correct coin is checked then a signal to controller signal is send which is then checks by controller that if container is present or not and if the container is present then it starts the motor to fill the water by using pulses of container using the motor as long the container is present. During the process if the container is removed then the system stops immediately.

4. System Architecture

The system which uses the water ATM controller, which uses a 12 VDC supply to solenoid valve which is use for inlet and outlet connection for system. The controller also has the android app with 2.8 inch LCD display. The Automatic Dispenser machine, vends water to customer. It can also be used by placing RFID card to the Controller on dispenser system. Solenoid valve is opened by controller to vend some amount of water. RFID card can also be detected. A bunch of RFID cards can be initialized so that they are recognized by a particular set of Proton ATM Controllers only. Thus, avoiding inter vendor usage. Charging of an individual card with an amount in Rupees through controller. When the signal is received from RFID card, ,then desired amount is deducted .The controller checks if the level of water in the tank is low and even check balance of RFID card. There is auto calibration function in the controller, where a unit liter (1 liter) can be calibrated with the help of known capacity containers of 1, 2, 5 and 10 liters .

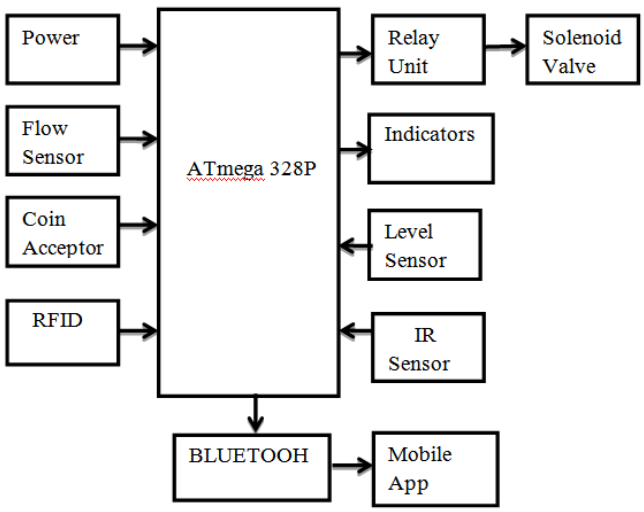

Fig. 4: Architecture Diagram

4.1 Flowchart

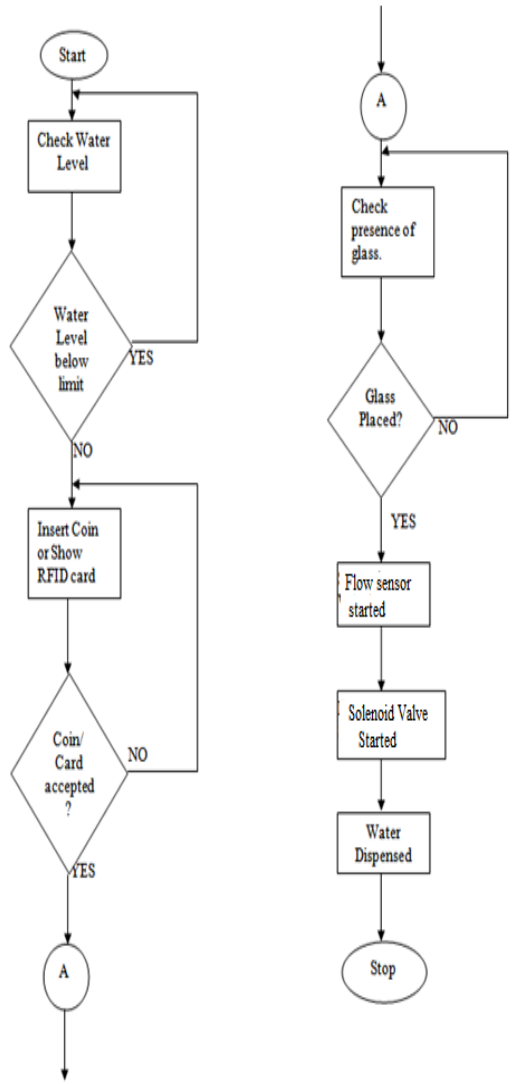

Hardware Design

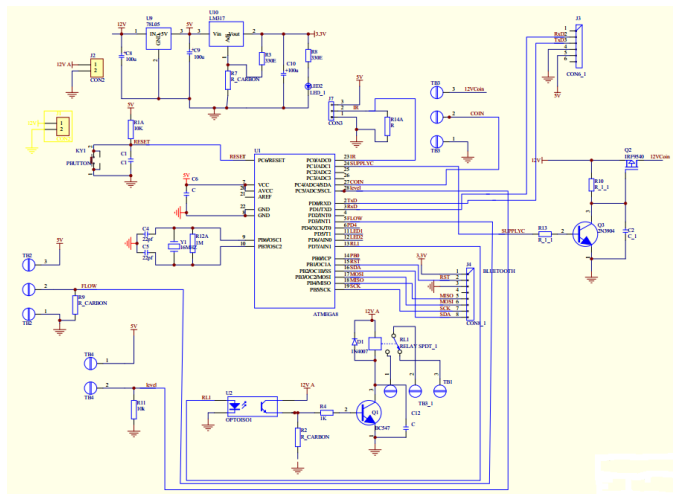

e ISSN 2348 –1269, Print ISSN 2349-5138
Marathwada Mitra Mandal, Pune

5. Advantages

- In this system mobile application will be developed which is user friendly.
- Dependency of citizen on packed drinking water will reduced, especially for the people who live in rural areas.
- The system is accessible to authorized person only.
- Sensors can be protected by notifying the authorized person in case of damage.

6. Result

On inserting different coins particulat amount water will dispense if the level of water is not low. On detecting correct or valid RFID tag by reader customer will get pure and clean water. If container or glass is present then only water will dispense wastage of water is prohibited.

Conclusions

This project introduces a water dispensing machine which operates on multiple coins. Various component like a IR sensors, coin sensor, water pump, regulated power supply, etc. are implemented to design an efficient dispensing system. The system can be programmed for different types of coins with the help of multiple coin acceptor and for certain duration with the help of algorithm and programming in Arduino. The dispenser can be installed roads, highway, etc. To provide pure water at low cost. This prohibit wastage of water.

Future Scope

- Increase in diameter of the Water Solenoid Valve and pipes would increase the flow rate. Hence, taking lesser time to fill in the container.
- The whole product can be redesigned for it to be aesthetically pleasing and for its better usability.
- Can be used for other liquid refreshment.
- RFID tag identification and reading can be developed to accept the money cards.
- This system can also be converted into IOT based.
- Image processing system can be use for detecting the faulty coins

Acknowledgement

Authors wish to acknowledge Principal, Head of department and guide of their project for all the support and help in certain conditions. To express very great feeling of appreciation to their regarded guardians for inspiring to the finishing of paper.

References

1. https://www.researchtrend.net/ijet/pdf/21-S-803.pdf
2. "Automated Water Supply with Monitoring system" N.B. Bhawarkar, D.P. Pande, R.S. Sonone, P.A. Pandit, Dept of E&TC, Amravati University. International Journal of Current Engineering and Technology E-ISSN 2277-4106, P-ISSN 2347-5161Voume 04, No 5 OCT 2014.
3. Real Time Embedded Drinking Water Vending Machine, Sasikala, G., Kuldipsing Rajput, Sarfaraj Hussain and 4 Aastha Shrivastava Asian Journal of Science and Technology, Vol. 5, Issue 12, Pp.804-2014.
4. ''Coin operated Water Dispenser'', Aditi Mohan, Niyati Tiwari, Rajdeep Ghosh, Prof. A. A Shinde. International Research Journal of Engineering and Technology (IRJET).
5. Research and Development of Practical Water Dispenser" Chin Jung Huang, Fa Ta Tsai, Proceedings of 2017 IEEE International Conference on Applied System Innovation IEEE-ICASI 2017 - Prior,Meen & Lam (Eds)

Iot based Industrial Automation

[1]Kedar Gopale, [2]Sujata Bhise, [3]Viki Waghmare, [4]Prof. D. N. Parkhi
[1,2,3]Students of E & TC Department, Marathwada Mitra Mandal's College of Engineering, India
[4]Assistant Professor in E & TC Department, Marathwada Mitra Mandal's College of Engineering, India

ABSTRACT: *The classification as Internet of things has multiple technologies, the combination of real-time analytics, embedded systems and machine learning s, and In internet of things, things are refers to devices like Bluetooth connected headset, temperature measurement , sensor, actuator etc. which can sense some parameter, and Things are connected together to generate meaningful result, Here we developed efficient industry automation system that allows user to sophistically control industry appliances or machines over the internet.*

Keywords: *(Arduino mega-2560, Sensor, GSM module, WIFI module ESP8266).*

1. Introduction

Automation is the cleverness which a performed to reduce human efforts. Automation is the automatic control of various types of effective equipment such as instrumentation process, process of factories, boiling coil (Heater) and heat-treating ovens, steering of ships and other applications. Microcontroller (Arduino) is used by proposed system for processing all user commands. In this we can send command to Wi-Fi module through internet then Wi-Fi module receive it then receive information is decoded and pass towards the microcontroller. The microcontroller then takes actions as per user's commands. In this project there are two mode which are -1st Automatic and 2nd Manual. In automatic mode the system will performed as per schedule for example. (LDR sensor sense the surrounded environment and as per need it will turn on light-bulb in industry) In manual mode operation we can operate system manually not as schedule.

II. Literature Survey

Geetesh Chaudhari "Industrial Automation using sensing-based application"-The system makes use of microcontroller and various sensors to control the industrial devices using Bluetooth. –
Ashwini Deshpande "Industrial Automation using Internet of Things"-The industrial devices are controlled using cloud server which alerts the admin about uneven conditions using Bluetooth.

III. System Hardware Design

Following are component list used in the hardware design.
1. Arduino atmega 2560
2. Wi-Fi module (ESP 8266)
3. GSM Module SIM 300
4. Relays
5. Sensor's

Automation can cover small household application just like controlling a Room light, to the large industries application. It has thousands of input measurements and output control signals. In control it can range from simple on-off control to multi-variable high-level Control system

A. Block diagram

e ISSN 2348 –1269, Print ISSN 2349-5138
Marathwada Mitra Mandal, Pune

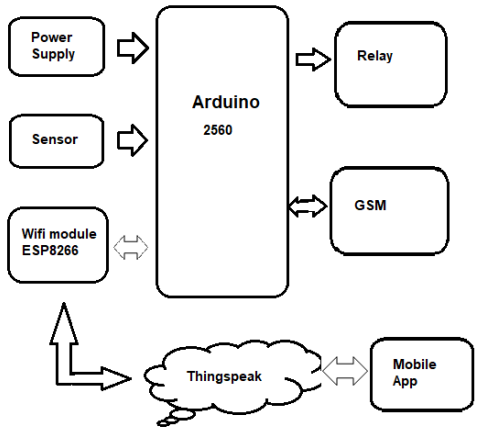

Fig-1 Block diagram

a. Power supply

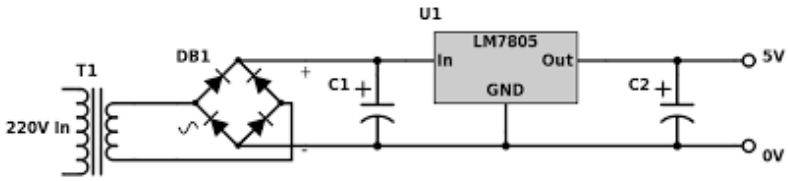

Fig-2 Power supply unit

It has 230V,50Hz Ac supply This supply can converted into 5V Dc, because all component (Sensor) need Constant 5V Dc supply So voltage regulator (LM7805) can provide constant 5V Dc supply to component. This supply can pass Separately to Sensor (LM 35, IR, LDR, water Level sensor), GSM, Relay, Arduino atmega 2560 etc.

b. Arduino Mega-2560

We are using Arduino mega-2560 It is a microcontroller based on the ATmega-2560.It has better advantage than arduino Uno board. Arduino mega-2560 has 54 digital input and output bidirectional pins in which 15 pins are used by pwm outputs), and there analog input pins are 16, uart pin -4 (it is hardware serial ports), crystal oscillator is 16 MHz, connection type is usb, a power jack, and it has also reset button to reset the board. for storing code, it has 256 KB flash memory (in which boot loader required 8 KB), and EEPROM required 4 KB (for read and write purpose). Working of Arduino 2560 It is Heart of the system, which controlled all circuitry. In this board If the supply less than5V then board may unstable state and if it is greater than 12v the sometimes board will overheat and because of overheat the board will damage. Arduino board need voltage between 7Vto12V

Fig-3 Arduino 2560

c. Wi-Fi module

This is reliable and ultra-low-cost module The ESP8266 Wi-Fi Module is a self-contained with TCP/IP protocol stack because of this we can access any microcontroller to our Wi-Fi network. ESP8266 is capable for transmitting and receiving information. This Wi-Fi *module* access microcontroller and connect to Wi-*Fi* system and make easier and simple, to transmit and receive data via radio frequency. It works by implementing the 802.11 set of protocols

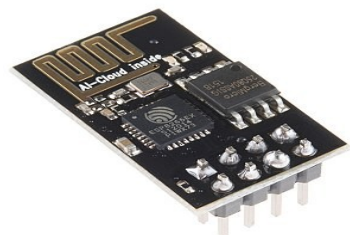

Fig-4 WIFI module

Applications

- Home automation
- Wireless Remote Control
- Smart plug and lights
- Wireless Sensor Networks
- IP cameras

d. Relay

Relays are electromechanical switch that simply open and close circuits. Relays can control circuit by closing and opening contacts. Relay we controlled industries part such as (Fan, Pump, Light, Exhaust fan, etc.)

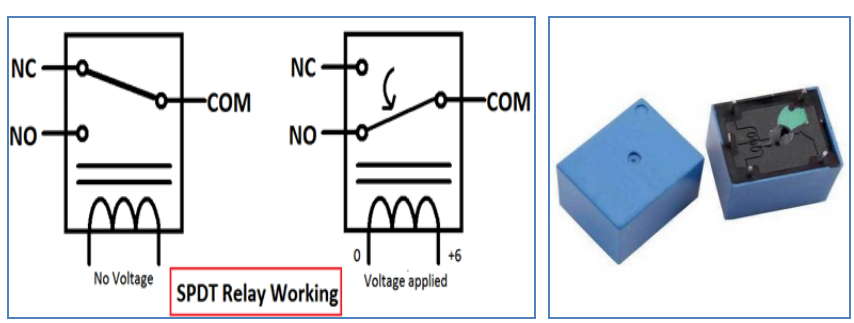

Fig-5 Relay connection

The connection switches of the relays are as NO, NC and COM.
NO referred as normally open, NC refereed normally closed and COM is common (moving part).
When coil is off moving part connected to NC and when coil is on moving part is connected to NO

Applications

- motor control,
- Electrical fuel pump
- In home, industries opening and closing circuit, also it is used as starter

e. GSM

It is a next generation mobile-based wireless Industry/ home security system, shop and office security system (commercial security). This GSM based alarm system provides wireless security by keeping track of the various access points like door, window or shutter through sensors or wired line. In case in industry thief tries to make a forcefully entry, this system blows security alarm (siren) to shock away the thief and

e ISSN 2348 –1269, Print ISSN 2349-5138
Marathwada Mitra Mandal, Pune

system sends SMS to user mobile phones (both GSM/CDMA) and operate buzzer and a relay to controlled any external load or application immediately

Proposed system send command from mobile messaging to GSM system then this will passed this command to Arduino and then action will take place.

Fig-6 GSM modem sim (300)

f. Sensor

In our project we developed Industrial Automation by using various sensor's such as

1. LDR (light dependent resistor)
2. LM-35/Dht11(temperature sensor)
3. MQ-2(smoke sensor)
4. IR (Infrared sensor)
5. Water level sensor

This sensor can be effortlessly installed in any industry. Using IOT and GSM in industries we can monitor and control the industrial things.

IV. Procedure

1. Initialize ESP8266 WIFI module.
2. In the browser type IP address and press enter or Find application on your android mobile phone.
3. Wait for the web page to open.
4. Press ON button to start any device.
5.The concept of IOT will be implemented.

i. Flow chart

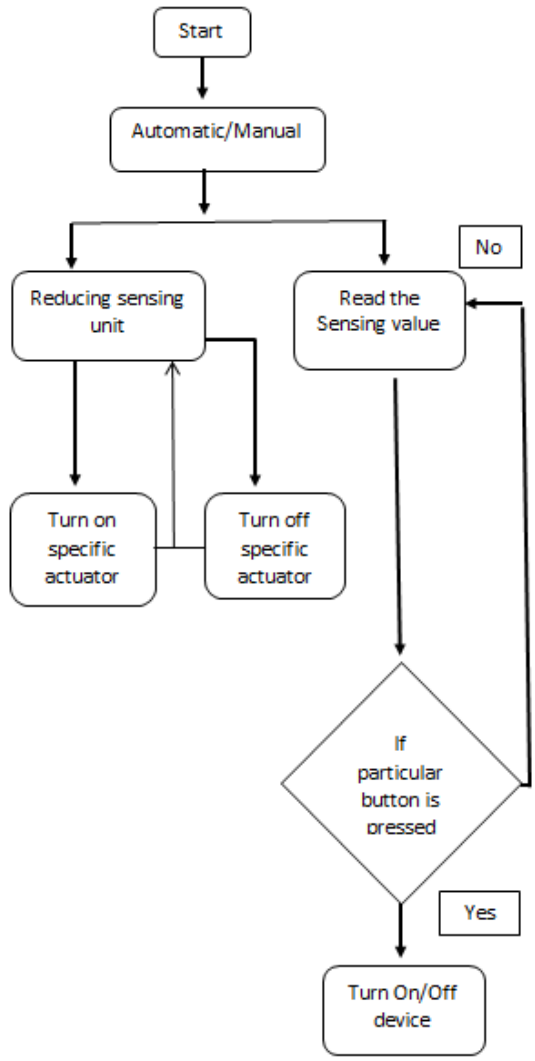

Fig.7 Flow chart

V. Conclusion

The system that we presented in this project was a demo, and it can be effortlessly installed in any industry with an increasing in technology, it is usually that the availability of internet is everywhere. We are developing an industrial automation using (IOT) internet of things industrial appliances and to inform the User to take appropriate measurement. This paper aims Using IOT in industries we can monitor and control the industrial machineries more easily and help for improving the performance of the day to day activities of the industry.

Reference

1. Geetesh Chaudhari, Sudarshan Jadhav, , "Industrial Automation Using sensing based application for Internet of Things",IARJSET,Vol.3, Issue 3, March 2016.
2. Ashwini Deshpande, Prajakta Pitale, Sangita Sanap", "Industrial Automation using Internet of Things(IOT)", IJARCET, Volume 5, Issue 2, February 2016
3. Li Da Zu" Internet of Things in industries: A Survey" IEEE transaction on Industrial on Industrial informatica, vol,no, November 2014
4. Sadeque Reza khan Professor Dr .M.S.Bhat "GUI based Industrial Monitoring and control system"

e ISSN 2348 –1269, Print ISSN 2349-5138
Marathwada Mitra Mandal, Pune

5. Ayman Sleman and Reinhard Moeller "Integration of wireless sensor network services into other Home and Industrial networks""IEEE paper
6. http://www.wless.ru/files/GSM/Qisda/M33G/M33(A)G_Datasheet_Rev_1.0.3.pdf
7. "Industrial Control and Instrumentation" by W Bolton

Stimulation and Bio Feedback Using EMG Signal Targeting Urinal and Gynaec Muscles

Mervyn Vaz , Hrishikesh Joshi, Pranav Auti & Prof. Manisha Dudhediya
UG students, Department of E&TC,
Marathwada Mitra Mandal's College of Engineering,
Pune, Maharashtra, India

ABSTRACT: *In EMG (Electromyography) , we take biofeedback with the use of stimulation of the targeted muscles of the body. Here, recording and study of myoelectric indication is specified in the field of urology and gynaecology. Result of this analysis is significant in the treatment of both gynaec and urinary muscles which is inclusive of all age groups.*

Keywords: *EMG, myoelectric signal, urinal and gynaec muscle.*

1. Introduction

Medical Electronics is field where electronics & biology complement each other in great way. By adding Biofeedback to the pelvic muscles strengthening , we are giving it different aspect to the analysis of targeted muscles.Urinary urgency and frequency associated with pelvic floor spasm can be a diagnostic and therapeutic challenge . Purpose of this research is to find solution to this problem. Our process includes signal extraction to signal displaying using signal conditioning. Major challenge in this process is pre amplification and filtering[5]. Most significant aspect of this project is research needed to implement a product.

II. Literature Survey

1. A Finely Machined Toothed Silver Electrode Surface for Improved Acquisition of EMG Signals.
This paper focuses on the analysis of different electrodes used for EMG extraction based on signal to noise ratio. This paper provides information of electrodes to be used for various purposes.

2. EMG signals detection technique in voluntary muscle movement.
This paper involves discussion regarding EMG methods and voluntary muscle movement. This paper provides efficient ways of understanding the nature of EMG signal we are dealing with which can be utilized to develop other flexible and efficient applications.

3. Classification performance of the frequency-related parameters derived from uterine EMG signal.
Comparison and classification of frequency parameters of EMG signal has been dealt with in this paper. Analysis of frequency parameters versus amplitude based parameters has been done in this paper. Results are quite useful to understand pregnancy as well as labor performances.

Proposed System

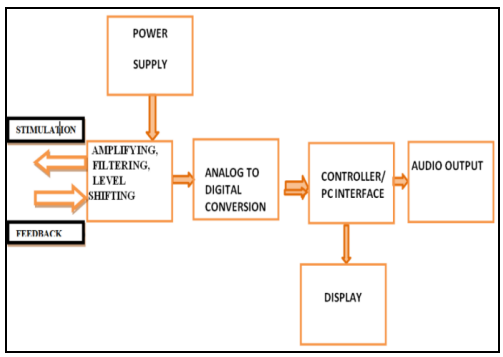

Figure.1-Flow diagram of EMG.

e ISSN 2348 –1269, Print ISSN 2349-5138
Marathwada Mitra Mandal, Pune

In this system, proposed working includes extraction of signal , signal conditioning , signal displaying as well as audio output of a signal.

Detailed system explaination :

Stimulation

First of all Stimulation to motor neuron is done. In stimulation, small electrical signal is used on the targeted muscle[5]. In this process electrode gel plays important role.

Types of electrode generally used in EMG extraction:
Following are the type of electrodes used for EMG depending on muscles :

1. Needle electrode: The tip of the needle electrode is bare and used as a detection surface. Quality of signal of needle electrode is generally better than other electrodes[4].

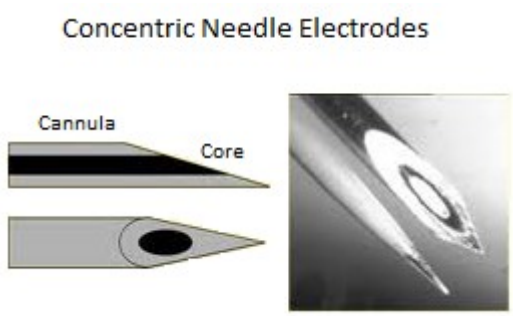

Figure.2-Cross section of Needle Electrode.

2. Fine wire electrodes: Wire electrodes have insulation and have small cross sectional area . Needle electrodes cause more pain than this electrode[4].

Figure.3- Fine wire EMG electrode

3. Surface EMG electrode: These type of electrodes are commonly used in EMG as they are easy to use & have probable output.

There are two types:
1. Gelled electrodes

Figure.3-Gelled Electrode stimulation to body

Dry EMG electrodes

Figure.4-Two point electrode

As every muscle provides different frequency, different electrodes are used for different muscles. As this project emphasizes on urinal and gynaec muscle, we have used needle electrode.

Bio Feedback

Pre - amplification : Pre amplification of very weak EMG signal is required. This was done by using AD620 with the adjustable register of 510 ohm.

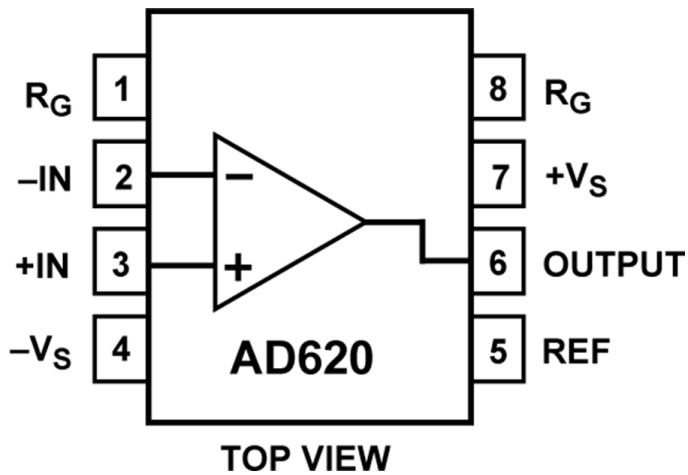

Filtering: Received signal has various type of known and unknown noise so filtering needs to be done.

At first stage we hoped to use digital filter but we realized that it is impractical to expect all the non-engineers using this product to install softwares that perform digital filtering.
After finalizing on analog filter , we made analog band -pass filter that is made by cascading low pass filter and high pass filter using Op-07.

e ISSN 2348 –1269, Print ISSN 2349-5138
Marathwada Mitra Mandal, Pune

Here , calculation of components used in the filters is done by using transfer functions of 2nd order and 1st order filter.

Calculations of gain of different stages of filters has been done by sallen - key topology.

Here is the result of high pass filter:

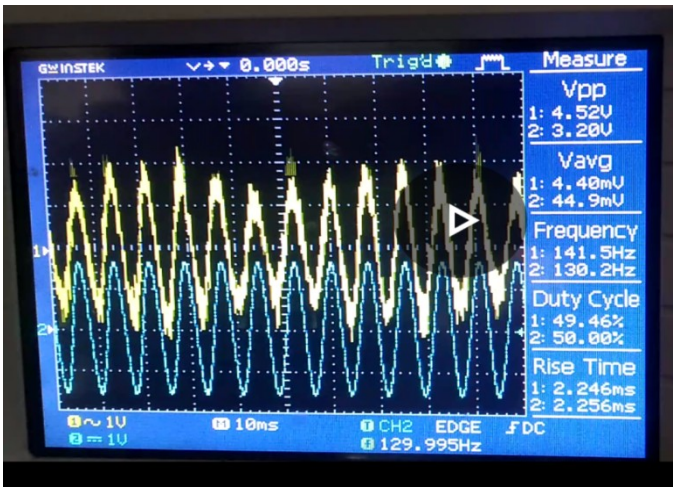

3. Analog to digital

Analog to digital conversion is required as the signal is given to personal computer to display[5].
Analog to digital conversion requires very high resolution as medical electronics requires accuracy[2].
Here we have used 12 bit resolution ADC.
The reason ADC feature from microcontroller was not used is because most ADC in microcontrollers are below 10 bit resolution.
So, we used MCP3204 for ADC.
This IC requires SPI communication so we interfaced this IC with Arduino Uno's SPI communication.

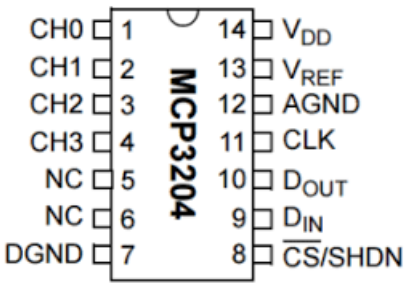

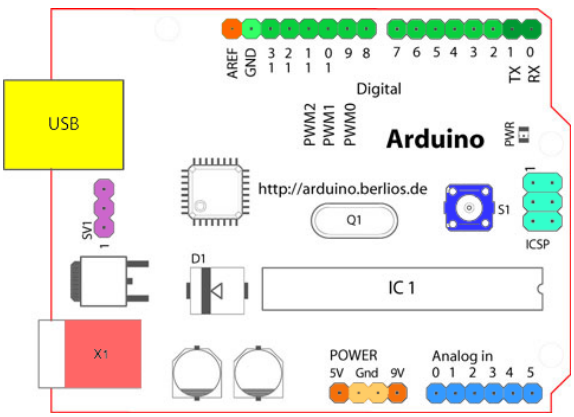

4. EMG signal representation

EMG signals are to be represented in two forms:

1. Display: EMG signal is displayed as it is to be used to asses the situation that the muscle is going through.
2. This output is very useful for gynaecologists, physiotherapists as well as other non engineering assistants.[7]
3. Audio output : Audio output is as useful to determine the strength of EMG signal.[6]

Step by step process

Step 1: Data acquisition using electrodes
Step 2: Signal preprocessing
Step 3: Filtering of noises using analog filter
Step 4: Display of data on PC and audio

Application of EMG signal

To learn about the time for which the muscle contracts and relaxes that is , when the activity of the muscle starts and terminates[5].
To rate the impact processed by the muscle.
To obtain an index of the rate at which a muscle fatigues
through the study of the frequency spectrum of the signal[8]
To predict time for labor pain.

Future Scope

In today's age , data has immense importance. The results of the tests that are performed can be uploaded to cloud to analyse afterwards and keep in record if the same patient visits the doctor after a certain time[6].
This EMG information is supposed to be used for machine learning and used to predict about the state of the muscle and to use this data for pattern detection of similar data of other patients in future.

Challenges

1. Signal preamplification is not an easy task as the extracted EMG signal is very weak signal.
2. Filtering of EMG : Many different type of noises were encountered while filtering the signal.
3. Accuracy of signal representation

References

1. Moslem B. , Karlsson B. , Diab M.O. , Khalil M. and Marque C , "Classification Performance of the Frequency-Related Parameters Derived From Uterine EMG Signals"
2. Adnan Ahmed Ali , Albarahany, Liu quan , "EMG Signals Detection Technique in Voluntary Muscle Movement"
3. Strungaru, R. (n.d.). EMG biofeedback system. [1991 Proceedings] 6th Mediterranean Electrotechnical Conference.
4. "Information analysis on electromyograms acquired using monopolar needle, concentric needle and surface electrode", International Conference on Recent Trends in Electrical, Control and Communication (RTECC),A.Bakiya., K Kamalanand.
5. Carvalho, L. C., Albuquerque, H. F., Pontes, C., Maia, M. T., Mangueira, D. P. R., & Batista, L. V. (n.d.). Computerized biofeedback tool: application in electromyogram-biofeedback. Proceedings of the 25th Annual International Conference of the IEEE Engineering in Medicine and Biology Society
6. 1Kollmitzer, G.R. Ebenbichler and A. Kopf, "Reliability of surface electromyographic measurement,

e ISSN 2348 –1269, Print ISSN 2349-5138
Marathwada Mitra Mandal, Pune

IOT Based System for Remotely Controlling Digital Signage

Adesh Kankhar, Chirag Borole, Sujit Ghule, Prof. A. J. Nimbalkar
Marathwada Mitra Mandal's college of Engineering,
Karvenagar, Pune, India

ABSTRACT: *IOT is a concept that enables each and every one of your things to send some kind of information about themselves or their environment to the owner of those things. The things can be as simple as your table, chair, home and as complicated as your car, weapons, industrial machines etc. The reason behind this is to be aware of the condition of your things or the conditions in which your things are without you being physically there. The aim of this research is to remotely control the digital signage board parameters such as brightness, contrast, back light, on/off controls, volume and measure the power consumed by digital signage board. The proposed system uses Beaglebone Green (BBG) as a main processing unit which will improve the performance and will consume less amount of power for operation.*

Keywords: *Internet of things, Beaglebone Green, lighttpd, Digital signage board, web server, Internet.*

1. Introduction

A digital sign usually consists of computer or playback device connected to large, bright screen such as POPAI compliant LCD display used to display digital images, weather data, video, restaurant menus, and web pages. Digital signage boards are possibly found in retail stores, hotels, museums, restaurants, transportation systems and corporate buildings, stadiums and many other public places. Digital screens such as LED, LCD and projection screens are used to deliver the content of digital screen media, either outdoors or indoors, in public as well as corporate spaces. Digital advertising is the network of digital displays which are centrally managed for targeted advertisement and information.

Digital signage is very popular in various business domains and its importance increases everyday. Most companies use digital signage for various purposes. It creates opportunities for customizing the various type of information that they want to deliver [1].Digital Signage can be used for announcements, advertising, promoting products, live traffic details, entertainment, news, headlines, weather, etc. Use of various technologies and sensor in a digital signage make it possible to adapt to context such as location, time and many other options that catches the audience's attention [2]. Many systems has been designed for digital signage boards that display the weather update, news, advertisements, live traffic etc. which can be controlled remotely using web applications and the internet. In this project we are going to control the digital signage board (LED/LCD) parameters such as brightness, contrast, back light, on/off controls, volume, video change and measure the power consumed by the digital signage board so that there is no need to visit the remote location where the board is placed just to adjust the above parameters.

2. Methodology

The main aim is to design and develop a system which can remotely control the digital signage board parameters such as brightness, contrast, back light, on/off controls and measure the power consumed by the digital signage board. The system consists of Beaglebone Green which acts as the heart of our system. A Apache 2 web server to host the front end as well as backend web interface. Beaglebone Green communicates with the board using RS232 protocol. For providing internet connectivity to Beaglebone Green, router is used.This makes Remote control of different parameters possible. In order to perform various actions on the digital signage board we need to send predefined frame of POPAI commands. To access the control panel, user needs to enter the IP address of the network connected to the Beaglebone Green Controller. After getting access to the control panel, user can control remotely the different parameters of digital signage board such as display power ON/OFF, change in brightness, contrast, volume, transfer from vedio1 to vedio2 and amount of power consumed etc. Actions performed on the panel will have a real time effect on the display board without refreshing.

The power meter is attached to the Beaglebone Green using RS485 module. RS485, also known as TIA485 (-A), EIA485, is a standard defining the electrical characteristics of drivers and receivers for use in serial communications systems. It is the standard that can be used for long distances communication. It is possible to connect multiple receivers to such types of network either in a linear or multidrop bus. These characteristics of RS48 gains it importance in industrial control systems and similar applications [4].The

Digital display acts as load for the power meter, the power meter measures the power that is consumed by the Display board. The block diagram of proposed system is shown in Figure-1.

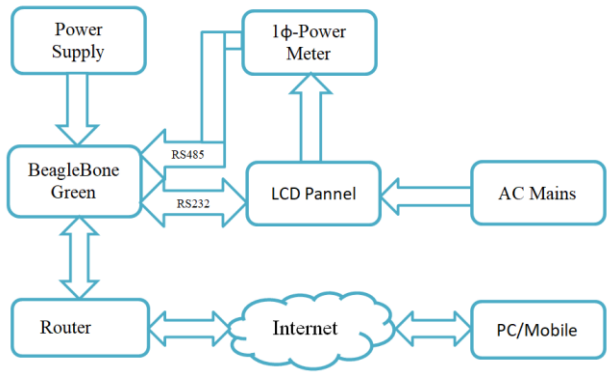

Fig 1: Block diagram of proposed system

3. Development Stages

1. Research
2. Selection of Components
3. Framing and testing of POPAI commands.
4. Back-end Development
5. Front-end Development

3.1 Research

Research is most important stage for development of any system. We researched latest technologies used for building and controlling digital signage boards and its market trends. We decided to design a system that can remotely control the digital signage boards. As the standalone applications won't work on other software platforms and scalability issues, we decided to build a web application for controlling digital signage boards that can run on any device which has access to internet. Such web applications are more simple and user friendly in web development.

3.2 Component selection

3.2.1 Beaglebone Green:

The Beaglebone Green acts as a heart of the system. Beaglebone Green has all the features with four USB 2.0 hosts, 2.4 GHz WI - Fi 802.11b/g/n and Bluetooth® 4.1 LE. Processor used is **AM3358** 1GHz ARM® Cortex®-A8 and 512MB of DDR3 RAM. The BBG has capability to connect to the large family of Grove sensors with Grove connectors. In BBG board the facility of onboard HDMI has been removed. The 2.4GHz wireless module on BBG makes it more suitable for IOT applications [6].

e ISSN 2348 –1269, Print ISSN 2349-5138
Marathwada Mitra Mandal, Pune

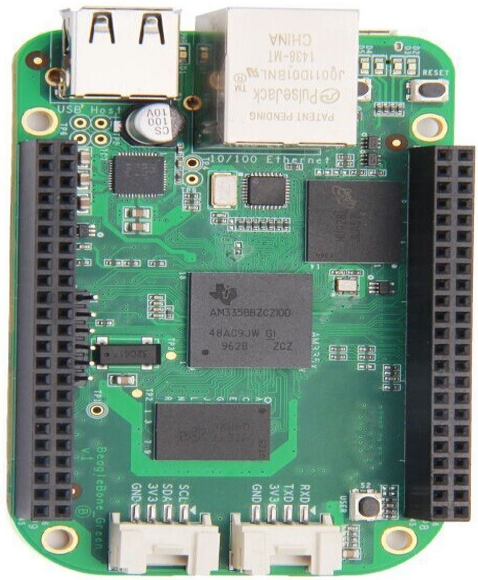

Fig 2:Beaglebone Green

Software Compatibility
1. Debian
2. Android
3. Ubuntu
4. Cloud9 IDE on Node.js w/
5. Bone Script library

The Beaglebone Green has many advantages over other platforms. A table is shown below to outline the features of these platforms.

Name	Arduino Uno	Raspberry Pi	BeagleBone
Model Tested	R3	Model B	Rev A5
Price	$29.95	$35	$89
Size	2.95"x2.10"	3.37"x2.125"	3.4"x2.1"
Processor	ATMega 328	ARM11	ARM Cortex-A8
Clock Speed	16MHz	700MHz	700MHz
RAM	2KB	256MB	256MB
Flash	32KB	(SD Card)	4GB(microSD)
EEPROM	1KB		
Input Voltage	7-12v	5v	5v
Min Power	42mA (.3W)	700mA (3.5W)	170mA (.85W)
Digital GPIO	14	8	66
Analog Input	6 10-bit	N/A	7 12-bit
PWM	6		8
TWI/I2C	2	1	2
SPI	1	1	1
UART	1	1	5
Dev IDE	Arduino Tool	IDLE, Scratch, Squeak/Linux	Python, Scratch, Squeak, Cloud9/Linux
Ethernet	N/A	10/100	10/100
USB Master	N/A	2 USB 2.0	1 USB 2.0
Video Out	N/A	HDMI, Composite	N/A
Audio Output	N/A	HDMI, Analog	Analog

Table 1: Comparison between BBG vs Raspberry pi vs Arduino

3.2.2 Single Phase Power Meter:
We have selected PZEM-016, AC communication module which is used for measuring current, active power, AC voltage, power factor, frequency and active energy The module reads the data using RS485 [6].Using this single phase power meter we are calculating power consumption

Specifications;

1.1 Voltage

1.1.1 range:80～260V
1.1.2 Resolution: 0.1V
1.1.3 accuracy: 0.5%

1.2 Current

1.2.1 range:0～10A(PZEM-014); 100A (PZEM-016)
1.2.2 Starting measure current: 0.01A(PZEM-014); 0.02A(PZEM-016)
1.2.3 Resolution: 0.001A
1.2.4 accuracy: 0.5%

1.3 Active power

1.3.1 range:0～2.3kW(PZEM-014); 0~23kW(PZEM-016)
1.3.2 Starting power: 0.4W

1.4 Communication interface:

Rs 485 interface.

Fig 3: Single phase meter.

3.3 Framing and testing POPAI commands.

For serial connection from a Beaglebone Green to a display screen, the POPAI Digital Signage Standards committee recommends manufacturers use RS-232 communications over a serial cable with a 9 pin female DB9 connector and a DCE pin out on the display device. POPAI commands are the frames of Bytes code that perform a predefined task. These commands need to be sent in the appropriate format over RS232. After successfully performing the desired task the display will send acknowledgement to the user about status of this task.

3.4 Back-end Development

This stage of development includes a Apache 2 web server, a control panel webpage from which the digital signage board can be controlled. The technologies required for developing backend are lighttpd and python Script.

3.5 Front-end Development

The front-end development is done using HTML5 and CSS. CSS, Cascading Style Sheet is used to customize the front–end. CSS is used to display HTML elements. It adjusts the fonts, lines, background images, color, height, width, margins, positions and many more. Thus CSS is use to control the layout of multiple Documents using single sheet.

e ISSN 2348 –1269, Print ISSN 2349-5138
Marathwada Mitra Mandal, Pune

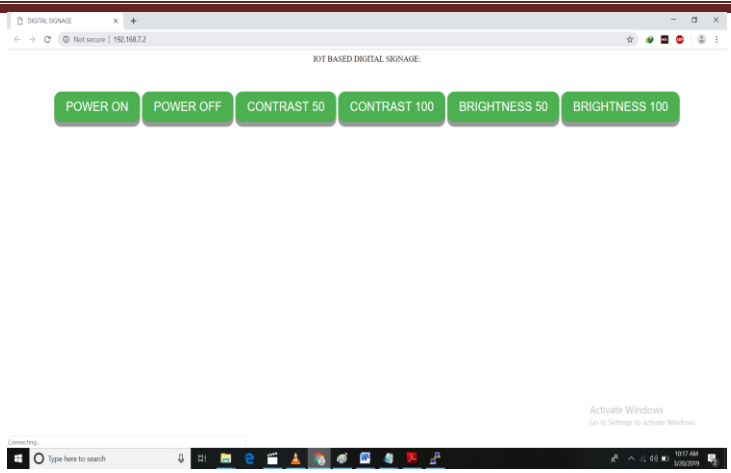

Fig 4: Screenshot of web page Control panel.

4. Conclusion

As there are advancements in technology every day the display board systems are changing from static display boards to digital signage displays. An effective, efficient, cheap and fast remotely managed embedded Digital Signage System architecture has been designed, implemented, developed using Beaglebone Green and web application. This system is used to control the digital signage board placed at any remote location by using a web application and the internet.

5. Acknowledgement

This project was supported by PAKO Technologies Pvt. Ltd., Pune .Testing and implementation of the work was carried out at PAKO Technologies Pvt. Ltd

We would like to thank Mr. Archis Bhave (CTO, PAKO Technologies Pvt. Ltd.) Guide and Mentor of the project for providing insight and expertise for this project work.

References

1. https://eu.mouser.com/new/seeedstudio/seeed-studio-beaglebone-green-wireles
2. https://www.academia.edu/9496581/Design
3. Kuo-cheng Yin, Hsin-chieh Wang & Don-lin Yang, (2012) “A Study on the Effectiveness of Digital Signage Advertisement”, Hangzhou, 2012 International Symposium on Computer, Consumer and Control, pp 169-172.
4. https://www.set-transducer.com/Article-RS485.html
5. Mr. Swapnil Alase, Miss Vaibhavi Chinchur,” IOT BASED DIGITAL SIGNAGE BOARD USING RASPBERRY PI 3” Electronic Notice Board for Professional College", International Journal of Science, Engineering and Technology Research (IJSETR) Volume: 04 Issue: 05 | May -2017, e-ISSN: 2395 -005 , p-ISSN: 2395-0072
6. https://www.mouser.in/new/seeedstudio/seeed-studio-beaglebone-green-wireless
7. https://community.openenergymonitor.org/t/pzem-016-single-phase-modbus-energy-meter/7780

IOT Based Smart Irrigation System using Raspberry Pi

Kajol Mane, Payal Lingampalle, Shubhangi Wakure, Prof. A. G. Dakre
Dept. of Electronics and telecommunication,
Marathwada Mitra Mandal college of Engineering,
Pune, India

ABSTRACT: *Water is the most essential factor of contribution for upgrading the productivity of agriculture. For improving the productivity in agriculture we need to expand the water system which is the key format of the improvement of farming. Water can be saved by irrigation system and minimizes the evaporation. There are several problems related to traditional methods of agriculture such as during irrigation they do excessive wastage of water in farm field. The purpose of this system is to increase the crop fertility and to minimize the evaporation and reduces the excess use of water. The project describes that using IOT how smartly irrigation system can be handle. This system can have used in parks and lawns. The neutral of this system is that, crops are monitor using camera continuously. The soil moisture sensor can be used to test the moisture of soil, depending on that water will be distributed to the plants. This entire information we can see on mobile or laptops.*

Keywords: *IOT, Soil moisture sensor, Raspberry pi*

1. Introduction

As in India the agriculture is the most vital source of food and other raw materials it is considered as the basis of life for us.it plays and important role in country's economic growth.

As the automation reduces the excess wastage of water, makes efficient use of electricity. The real purpose to implement automatic irrigation system to reduce the manual effort and makes full automated farm. IOT is used in many fields now a day to reduce the problems and to provide ease in work.so the IOT is used in agriculture domain and it helps in overcoming the huge difficulties in farming.as the new ideas are developed to increase the quality of crops, quantity and cost effective in production of agriculture. As inthe rapid growth of population, it is very necessary to see the requirements of human race with the agriculture.

Interconnecting the objects are communicating which are mounted at dissimilar places that are distant from each other in concerned with a IOT(internet of things).In this system the different sensors used to sense the data and make join anything to internet to interchange information. With the help of IOT we can monitor the data on the devices like mobile.

This system is designed to irrigate the farm at regular interval of time. In this system soil moisture sensor are placed at the surface of plant. The crops are monitor by camera continuously; it's data can be seen on the mobile device or laptop. The DHT22 sensor is a basic, low-cost digital temperature and humidity sensor in it, so there is no requirement to use separate sensor for temperature and humidity.

Our implemented system is fully automating irrigation system using IOT. Which is developed to reduce the farmer's difficulty. These irrigation system minimizes the manual effort of spreading of water in farm at the proper time. Raspberry pi3 play important role in this system. which is minicomputer. Raspberry pi3 has additional inbuilt features are Wi-Fi and Bluetooth. It reads the status for inputs of buttons switched and other sensors.

II. Literature Survey

After various researches in agricultural, the researcher has found that problem in the agriculture increasing day by day.

To decrease this problem and to reduce manual effects. The technologies are developed. The intention of this project is to reduces the number of labor's in farm by them the irrigations performed manually and to reduce the wastage of water. The automatic drip irrigation system is developed for water optimization in agriculture. In the proposed system the soil moisture sensor can be used to sense the moisture of soil, which is continuously monitored, depending on that motor will on or off. The measurement of temperature and humidity will continuously monitor using DHT22 sensor.

Now a day we can see many technologies are innovated in agriculture field. In this automated agriculture system, the crops are monitor by camera which help to reduce manual labor are used to monitor the crops.

- **Cosmin (2012)**:This investigation demonstrates there is unquestionable growing tendency in the adoption of artificial intelligence in agriculture. Under development of the IT infrastructure in many

e ISSN 2348 –1269, Print ISSN 2349-5138
Marathwada Mitra Mandal, Pune

countries is the first obstruction is using them, only around 30% of the word population currently having access of this new technologies.

- **Chetana et al (2012):**The automated wireless watering system is a used friendly system, which notifies the user about its status. The 2 modes of operations provide the user with the option of automatic and manual process. The system also provide log file of the events carried out.
- **Galande et al(2013):** Microcontroller based drip irrigation system using smart sensor . This system monitor and control all the activities of irrigation system. The present aim of model to simplified the agriculture industries at a big scale with ideal expenditure**.**
- **Shaik et al (2014):** GSM using PIC 16F877A microcontroller, the motor controlling system and water level monitoring system are based on it. Advantages of this system are:1) cost is efficient2) simple design.
- **Sami at el (2014):**IT sector providing facilities in process of information of ruler India to meet this challenges and to discard fast growing digital devises. As the indian government has given many facilities in agriculture and has achieved many techniques using ICT services is one among which helping the farmer to understand modern cultivation methods.
- **Mamta et al (2015):** This system has economical cost and feasible for most effective water resources for agricultural production. This system is suitable for any crop type so we can grow any crop type. we can grow any crop in agriculture as the system is feasible.

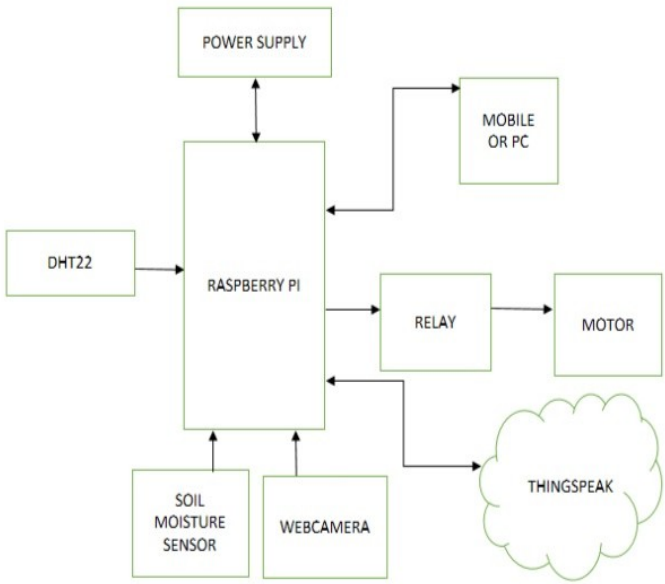

Fig. 1: Design of proposed system

Proposed System

The diagram of proposed system shown in fig.1. It consists of soil moisture sensor can be used to test the moisture measure content in soil. The DHT22 sensor is a basic, low-cost temperature and humidity sensor.

Methodology

This system has the combination of some hardware part and software part. The hardware part consists of different sensor like soil moisture sensors and DHT22 sensor, relay, motor and android devices. In Software part the data of sensor is sent on the thing speak which shows the measurement of sensed data on the graph. The hardware components are interfaced with raspberry pi. The relay is used to turn on and off the water motor.

- **Raspberry-pi:** The camera is interfaced with the raspberry pi-3model. The raspberry pi-3 model has additional features of Bluetooth and Wi-Fi. Raspberry pi is minicomputer which is also called as heart of the system. It has low weighted GPIO and power consumption is improved.

- **Relay:** It is 5v relay used in system design. The relay act as a switch.
- **Soil moisture sensor:** It is used to test the moisture contain in soil. Depending on this the water distributed to the crops/plants.
- **DHT22 sensor:** This sensor is the digital low-cost temperature and humidity sensor with single wire digital interface. This sensor is calibrate doesn't need extra components. It is simple to use. It gives new data once every 2sec.
- **Camera:** It is interfaced with raspberry pi. It continuously monitors the crop and the camera output it is sent to the mobile device.

Flow Chart

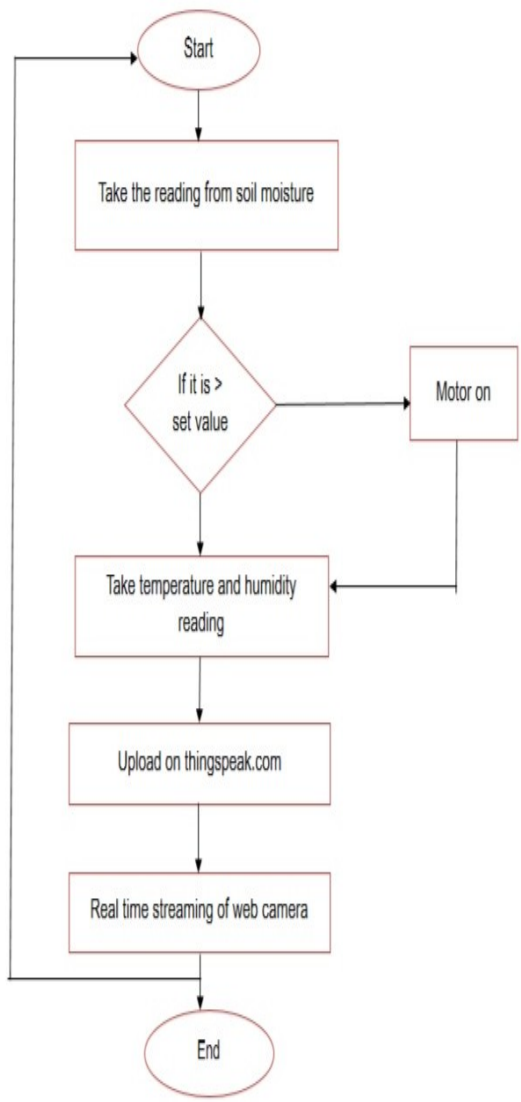

Fig. 2 Flow chart

- Step1: Start
- Step2: Measuring the soil moisture value.
- Step3: if the set value is below threshold value motor will ON and if the set value is above threshold value motor will OFF.
- Step4: continuously measuring temperature and humidity.
- Step5: The data of sensor is upload on thingspeak.com

e ISSN 2348 –1269, Print ISSN 2349-5138
Marathwada Mitra Mandal, Pune

- Step6: using thingspeak we get real time steaming of camera.
- Step7: End

Result

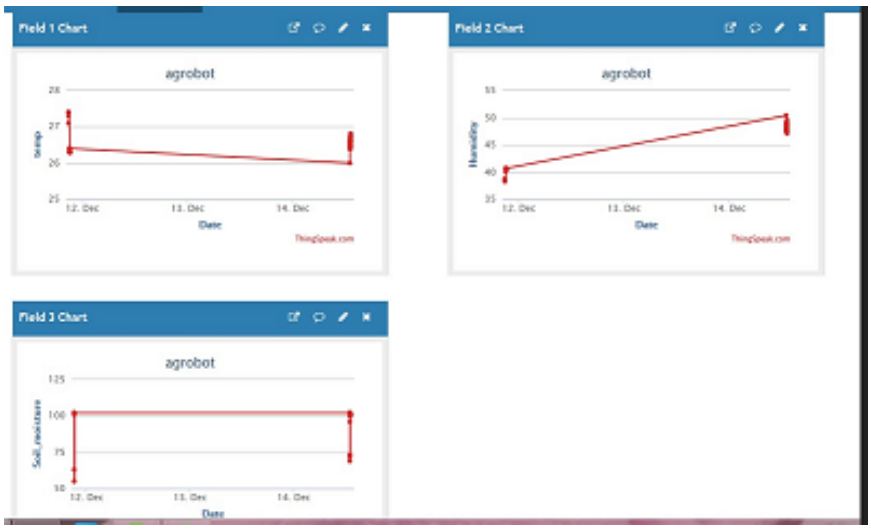

Fig. 3 Measurements of soil moisture, temperature and humidity

The reading of soil moisture sensor is continuously measure and sent of thingspeak. The DHT22 sensor is continuously measure temperature and humidity and sent on thingspeak which is shown in graph.
THING SPEAK: Thingspeak is a open source IOT application and API to stock and regain the data from the things. Thingspeak enables the creation of sensor, location tracking application and social network of things with status update . Thingspeak was launched by iobridge in 2010 as a service support of IOT application. Using thingspeak we can see the result from any wave with help of any login. Thingspeak is an open source IOT application that allows user to visualize, aggregate and analyze the live data in the cloud. It provides visualization of data posted by user devices to thingspeak gets instantly.

Conclusion
The implemented smart irrigation system has low cost for adjusting water resource for agricultural production. The implemented proposed system used to turn on and off the valve depending on the volumetric water present in the soil by making the process easy and simple to use. As water is most basic factor of agriculture, we have implemented automatic drip irrigation system to reduce the wastage of water and minimizes the manual efforts in the agriculture. In this smart drip irrigation system is designed using internet of things. Which is full automated system, it helps to reduce the number of labours in the agriculture field.This system provides efficient development in irrigation with IOT and automation. Thus this system is a solution to the problems faced in the existing process of irrigation.

Acknowledgment
I really would like to take this opportunity to definite my appreciation and drip regard to my (prof.A.G. Dakre), for his valuable feedback and guidance and continuous inspiration during whole project. His suggestions were helpful throughout my project work. His perspective kept me on working to make this project in a best way. Working under him was an knowledgeable experience for me.

References
1. Galande, M. S., & Agrawal, D. G. (2013). Embedded Controlled Drip Irrigation System. (IJETTCS), Web Site: www. Ijettcs. Org Email: editor@ ijettcs. Org,editorijettcs@gmail.com
2. Kestikar, C. A., & Bhavsar, R. M. Automated Wireless Watching System(AWWS).
3. Attar, S., &Sudhkar, K. N. Real-time monitoring of agriculture activities using wireless sensor network.
4. Manoj, H. G., & Udupa, N. G. S.(2015). Application of Soil Moisture Sensor in Mixed Farming.

5. Raspberry Pi Foundation. [Image - Smart Sprinkler] https://www.raspberrypi.org/wpcontent/uploads /2015/05/modulo-watering-project.jpg
6. Hollingum, J. (1999).robots in Agriculture. Industrial robot: and international journal, 26(6), 438-446.
7. Yethiraj, N. G. (2012). Applying Data Mining Techniques in the field of agriculture and allied sciences. International Journal of Business Intelligents,l(02).
8. Sanjukumar, R. V.(2013). Krishnaiah "Advance Technique for soil moisture content based automatic motor pumping for agriculture land purpose".
9. Srija, v., &Krishna, p.B. M. (2015).ImplementationOf agriculture automation system using web & gsm technologies.

e ISSN 2348 –1269, Print ISSN 2349-5138
Marathwada Mitra Mandal, Pune

IOT Based Vehicle Accident and Tracking System

Aboli Maske, Priya Oak, Jayshri Uge, Prof. Anup Dakre
Marathwada Mitra Mandal college of Engineering,
Pune, India

ABSTRACT: *In this paper, we proposed a system to detect vehicle accident and alert to the family member as well as nearby police control rooms and venitary services. Vehicle accident detection and tracking system using WIFI and GPS is been implemented on large scale nowadays. The numbers of accidents happening in our country are increasing rapidly everyday and existing systems for a person who meets with an accident are weak as per the ratio. So in this system we have introduced that whenever the accident occurs the short message is send through the system to the registered number and the location can be determined. Also the existing systems are focusing mostly on prevention of accident rather than taking immediate actions after an accident; so that the person could be save. The aim of the project is to identify the accidents happening on roads or highways and provide them immediate services.*

Keywords: *RF transmitter and receiver, LCD,Atmega 328 Micro-controller, Vibration Sensor, Regulator, GSM module, Google map, online platform.*

1. Introduction

The IOT(internet of things) is a platform of unique embedded devices and applications within the internet enviornment.Transportation has been a necessity of every person and its growth many lives around the world easy. But it can cause disaster to us and even can kill us through accidents. The increase cause of death in the world during 2008 is mainly due to the road traffic accidents which has been ranked fourth in the world.Anually, 1.5 million of the people die only because of accidents on the road and 20 to 50 million people suffer from minor to major injuries, is the survey taken from GDP (Gross domestic product). The accidents due to Road traffic increased around 2 million. If no action is taken it will increase yearly as per the research.

When a person is riding his private vehicle and accident occurs then it may cause some major injuries and due to lack of communication no one is there to help that person. This system is a solution to the increasing growth of accidents. This system is used to detect the accidents which sends the information of the vehicle to the nearby police control rooms. Eventually IOT is platform that offers the advanced features of connectivity of several devices, systems, domains and applications.

II. Literature Review

The survey is carried out on different techniques used in the detection of accidents. Different technologies and the survey is available for the accident detection and the tracking model. Many populated countries like India many people face accidents on large scale as there is lack of facilities.If the required Facilities are provided to the accident occurring people many lives can be saved.This system provides solution to many of this limitations.

[1]"Smart helmet Intelligence Safety for motorcyclists" explained by sadhana B has given the data to increase the road safety among motorcyclists. This idea of smart helmet has been analyzed and discovered for reducing accidents. Therefore, this project is designed to introduce safety systems for motorcyclist to wear the helmet properly. Raspberry pi is used by motorcyclist in Helmet intelligence safety. This particular proposed system meets the requirement of a perfect rider and has been helped in reducing various accidents and injuries. This system also helped many people to save their lives because of increased facilities.

[2] "Vehicle Accident Detection And Tracking System Using Advance Embedded" was the subject proposed by Sarika Gujar . The main reason of this system was to locate the position of vehicle and trace call for the emergency services. Vehicle accident detection is possible with the help of sensors. A GPS and GSM module helps to trace the vehicle. It can be used in public transportation system by the people to know the location of buses or train. In case of any accident, the system sends alert message to the pre-programmed mobile numbers. System uses the Global Positioning System (GPS) to know the exact location or position of the automated vehicle.

[3] "The Wireless System for Vehicle Accident Tracking and alerting system using Accelerometer sensor and Global Positioning System (GPS)" explained by Shailesh B. In this paper, Accelerometer sensor is used to

detect accident occurred and Global Positioning System give position of the vehicle. In instance, any accident taking place, the system send an alert message to the pre-programmed mobile number such as any family member or emergency hospital services via Global System Monitoration (GSM). He also aimed at Tracking of accident by use of microcontroller, Micro Electro Mechanical System (MEMS), accelerometer sensor, Global Position Sensor (GPS), Global System Monitoring (GSM), Temperature and alcohol sensor. The alcohol sensor helps the person who has consumed alcohol and thus preventing the accident. The gas sensor is used to detect the toxic gases that are released by engine during leakage.

[4] "Traditional or intrusive traffic monetarization Systems" explained by Hardjono B consists of road sensing system, which are necessary but has limitations because of their insufficiency on coverage connectivity and is very expensive if we install and implement this system. But it has been helped in traffic control and reducing the traffic hazards taking place on roads. From a number of experiment it has been found that Virtual Detection Zone method can be used to obtain 100 percent map matching system, as it ensures matching by comparison of the Global Positioning System(GPS) data to a set of pre-specified check data points, keeping privacy as the main parameter it works on three main solution the first solution is generating One Time Password password to doubly lock the sensor data and second solution is to check if the data is delivered to significant or required destination or not, and third solution is to split data into two parts before using One Time Password(OTP)

[5] "Tracking and monitoring vehicle Using GPS and GSM" explained by Ulhas patil. Many applications used the vehicle tracking technology using the GPS, This system is used to monitor the exact location and time to reach the destination continuously. This helps to estimate the exact distance to reach the particular destination obtaining geographical coordinates that are latitude and longitude values determining the exact location using Kalman Filter.

[6]Suzuki connect launched by maruti for nexa customers aims to enhance user for advanced technology of emergency alert and vehicle tracking and live status of vehicle. This application has to be installed in required customers phone . When it is installed and connected with smart phones with NEXA app, customers can get the details of emergency alert of vehicle tracking and another advanced features. Suzuki connect has launched in view of the customer. While you are driving in case of emergency it always informs you about its particular location's.

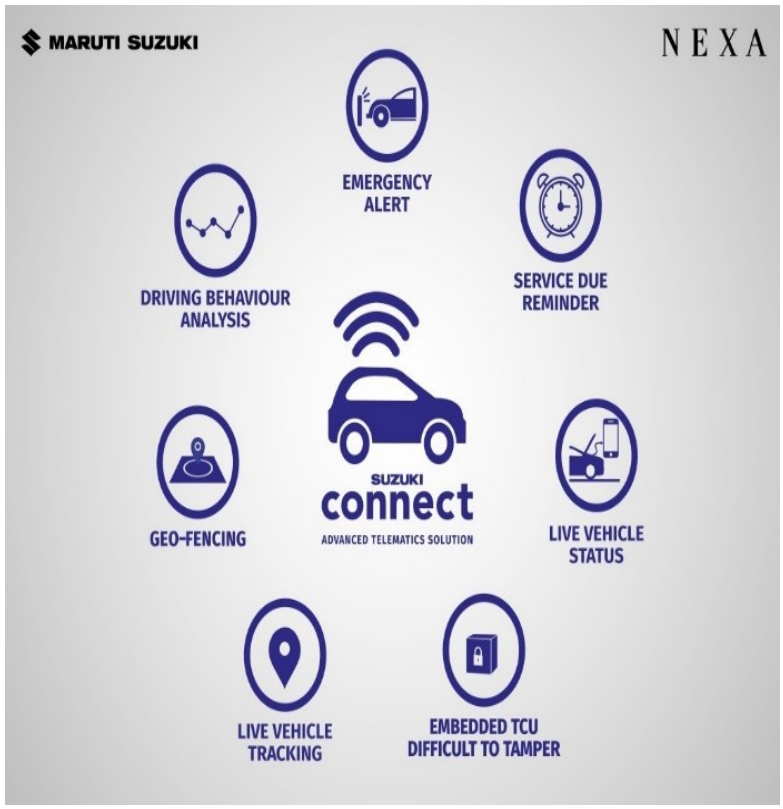

e ISSN 2348 –1269, Print ISSN 2349-5138
Marathwada Mitra Mandal, Pune

III. Proposed System

In this system Radio Frequency transmitter and Global positioning system tracking system are used for accident locating and detection. The system receive the signal from vehicle when accident occurs and via Global System Monitoring modem the message is send. Through Message we will get the respective longitude and latitude values. From these values we will get to know exact location of accident.

For this the private or public vehicle is fixed with a Radio Frequency transmitter circuit system that has a vibration and accelerometer sensor along with microcontroller device, Radio Frequency (RF) encoder and also fitted with a Radio Frequency transmitter. Every control room must have a Radio Frequency receiver installed to receive the transmission of the signal. Whenever a user of vehicle meets with an accident, the vibration sensor and accelerometer detects and gives result. This result is then located by the microcontroller. The new detected signal is send by using microcontroller to the Radio Frequeny Receiver. Depending upon the result the radio frequency transmitter begins to transmit the accident data. The nearest Radio Frequency transmitter reads the signal and then shows it on an Liquid crystal display (LCD) screen. The person controlling the Display screen may get reacted, reach the accident position and help the needy person and SMS is sent to preinstalled number giving position or the location of the vehicle and also it can be seen on online platform.

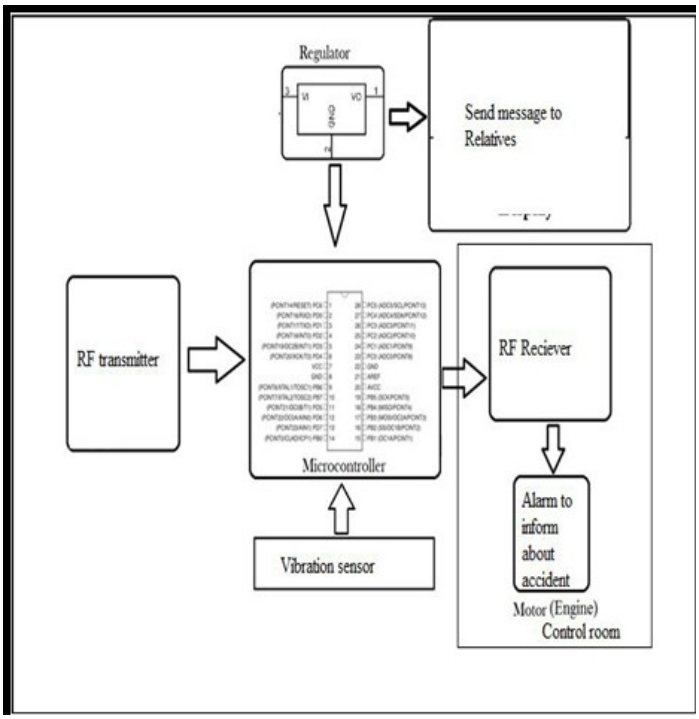

A. Transmitter

A Radio Frequency module (RF) is usually a small electronic equipped device. It is used to send or receive radio frequency signals between the transmitting device. The device is connected with other wireless device in an embedded system.

B. Receiver

A Radio Frequency module (RF) is a usually small electronic equipped device.It is used to send and/or receive radio signals between any of the two transmitting devices. The vibration sensor, which is useful for a various applications of different fields, has the ability to detect vibrations sensors in a given respective area. This can be helped to a person who is in trouble or accident caused person, and you will even find these types of sensors in use with security systems today.

C. Online Portal:

This is web page which basically integrated with google map after getting message from GSM module it redirect remote user on Google maps.

IV. Conclusion

This project named "vehicle accident detection and tracking system with SMS alert system to the preinstalled mobile numbers. The Global positioning System (GPS) tracking and Global System Monitoring (GSM) alert based algorithm/program is designed and implemented with LPC2148 Microcontroller in embedded system domain.Our proposed system "Accident detection and tracking system" can track the geographical location based on longitude and latitude values depending on particular area and sends an alert SMS notification regarding accident occured. TheExperimental task has been carried out more accurately and precisely. Electrically Erasable Programmable Read only memory (EEPROM) is interfaced to store the mobile numbers permanently in the system. This system meets the requirement of the user. We made the project more convenient and reliable. The proposed system is verified to be highly useful and productive for the automotive industry and society.

The Future usage or use of this system is that it can be implemented on Vehicle airbag System which prevents any inside object to strike vehicle occupants as like the steering.This can be developed by connecting a camera to controller system/module that can take photo of any specified accidental place/spot that can make the monitorization easy.

V. Acknowledgment

We take the opportunity to thanks all the persons who had showed their support to complete our work in précised manner and to complete this project successfully. We would like to express our sincere gratitude to Mr. Anup Dakre for constant support and devotion. We are deeply indebted to our guide, Mr. Anup Dakre for support and motivating in every aspect of this project.

VI. References

1. Aishwarya R, Ashish Raichandra, Charitha, Prasanth A, and Savita S.C "An IOT based vehicle accident detection and locating system for night drivers" proc. IEEE, vol.3,no.4, pp.2320-9798 2015
2. Asthana Sharing, Bhagya J.N, Maitri M, Pooja T., "Smart helmet-intelligent safety for private bike riders using raspberry pi", proc.IEEE, vol.03,no.03 pp.2395 2016
3. Jagdish A. Patel, Aringale Shubhangi, Shweta Joshi, Aarti Pawar and Namrata Bari discussed on "Raspberry pi based smart home", proc, IEEE vol.6, no.3, and pp.2321-3361
4. Harjona. B, Wibowo.M, Rachmadi..F, Jatmiko.W "Mobile phones as traffic sensors with map locating and private systems considerations", IEEE International Symposium digital object tracing systems, pp.450-455, Nov 2012.
5. Abdallah.H. Kassem, Rabih J., Ghady.k. Salamouni, Z. Khair Allah Maalouf from Department of Electrical and Computer science Engineering, Dame University, "Vehicle Black Box System", Sys Con 2008 - IEEE International Systems Conference Montreal, Canada,pp.1-6, April 2008
6. Mohamed.K.Fazeen, Brandon.C. Gozick, Ram Dantu, Moiz L. Bhukhiya, and Marta . González, "Safe Driving Using Mobile Phones" IEEE Transactions on Intelligent Transportation Systems, vol. 13, no. 3, pp.1462-1468, SEPTEMBER 2012.
7. N.LWatthanawisuth,T.K.Lomas and A.S Tuantranont, "Wireless Black Box Using Micro Electro Mechanical Systems Accelerometer and GPS Tracking for Accidental control of private vehicles" Proceedings of the IEEE-EMBS International Conference on Biomedical and Health Informatics,pp.847-850,Jan 2012.
8. World Health Organisation Road Traffic Injuries Fact Sheet No. 358, March 2013, Available from http://www.who.int/mediacenter/factsheets/fs358/en/ [Last access on 2017 Dec 16]
9. "Vehicle Accident Monitoring and locating System Using GPS and GSM Modem." By Aboli R Wakure, Apurva R. Patkar; IJERGS April 2014
10. http://www.ijerd.com/paper/vol10-issue4/version_4/B1042528.pdf
11. http://ijcsmc.com/docs/papers/April2015/V4I4201599a40.pdf

e ISSN 2348 –1269, Print ISSN 2349-5138
Marathwada Mitra Mandal, Pune

Smart Water Monitoring and Distribution System Based on IOT

Jyoti Ghotale, Rutuja Bhuvad, Supriya Jadhav, Prof. Harashda Burande
Electronics and Telecommunication Dept.
MarathwadaMitraMandal College of Engineering,
Karvenagar, Pune, India

ABSTRACT: *This paper presents a design of real time monitoring system. The quantity of water in IOT. The system having of a several sensors is used to measuring physical of the water the parameters flow sensor of the water can be measured. That of measured value from the sensors can be processed by the controller. As population is increasing day by day, urban residential area have also increase because of this reasons water has become an intense problem which affects the problem of water distribution, water conservation, water consumption, and interrupted water supply. People are found complaining that, they don't have required amount of water for their daily needs, so that overcome water related problem also make system efficient. There is necessity of monitoring, controlling system. This approach will help usefulness operators improve inexpensive water management systems, especially by using rising technology an IOT is one of them. The internet of thinks for developing more utility system, for making the consumption of water resources more efficient.*

Keywords: *Arduino, Internet of Things, Real Time System, Cloud computing.*

1. Introduction

The current scenario is, the employee will go to that place and open the valve for a particular duration, then again the employee will go to the similar place and close the valve, and it is time consuming. This system is fully automated. In this way time and human work are saved. This system will implement the design of IOT based water monitoring, distribution system in which shows the flow-rate and level of water in real timeThe concept of the IoT to its extent and improve the functioning of the device. This system includes some sensors which measures the all this water parameters primary concepts are real- time IOT based water resources information system is to provide comprehensive and correct information.

In some water-related field such as irrigation system, electricity powerhouse, and research, water level information is a very important issue. Generally, water level measurement was done manually but this cannot be capable due to some difficulties. The smart water distribution makes specific supplier equipment interoperable and manageable in a water management domain in a similar way. The concept of the IoT to its extent and improve the functioning of the device.. Now a day's different types of smart sensors are developing for the safety and security in emergency management strategy. Smart water management is only possible with help of IOT which includes the applications in monitoring the flow of water, Management of valves, Data analysis through Observations from different meters etc. in conventional method for each and every individual processes we require the human power and observation skills. To overcome the water management and distribution problem. Water is important resources in use of the earth in that, some people are not supply sufficient amount of water because of not equally distribution of water. This scheme is used to avoid the wastage of water during the distribution period. The current scenario is very hectic and time consuming. Here time and human work are saved. New approach IoT based water management and monitoring has been submit.In this project, system will implement the design of this IoT based water monitoring system that monitors the level of water, flow that rate in real time.

This system consist of some sensor which measure all these water parameter - the real - time showing of water resources information will benefit the water resources management department and the public. The primary concept of real – time IoT based water resources information system is to proved comprehensive and accurate information.An automatic water information monitoring system based IoT is constructed using techniques of sensor network, wireless communication network, Internet, database and in this system, water resource information acquisition, transmission, and remote monitoring data receiving and application are integrated through software and hardware.

II. Literature Survey

An Automatic water information monitoring system based

IOT is constructed using techniques of sensor network, wireless communication network, internet, database and in this system, water resource information acquisition, transmission and remote monitoring data receiving and application are integrated through software and hardware.
In building IOT based water meter aims is to implement smart meter which will provide high data analysis capability at cheap cost.
Unlike other technologies such as Zig Bee, Bluetooth and GSM based water meters, this meter will allow user to access real time also historical data anytime and from anywhere. The proposed system uses restful based web services for communicating between the IOT cloud and the water meter .
It is really such a challenging task that needs to provide knowledge because of highly located nature of agriculture information specially distinct conditions. The complete real-time as well as historical environment information helps to achieve efficient management and utilization of resources.

III. Flow Chart

Sender

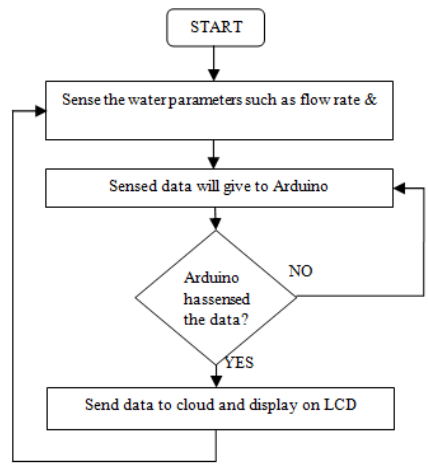

Figure 1. Transmitter tank side

When we start the all system, firstly ultrasonic sensor sense the water level and the flow sensor sense the flow rate these value send to Arduino and display on LCD as shown in above figure transmitter tank side.

Receiver

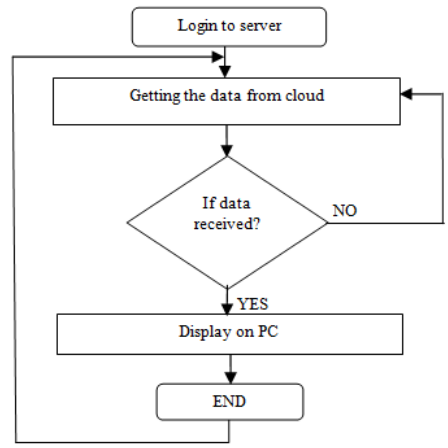

Figure 2. Receiver Web page Side

e ISSN 2348 –1269, Print ISSN 2349-5138
Marathwada Mitra Mandal, Pune

Access the data server. This data can be display on Monitor. Check the value of water level and flow rate of water as shown in above Figure 1. Web page.

III. Methodology

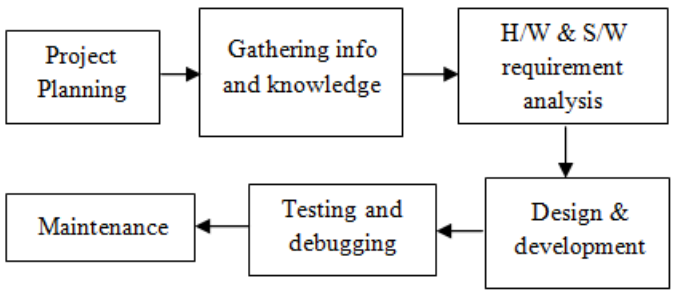

Figure 3. Project Planning

We have divided our entire work into some stage, which is the flow of our project. Using this work flow we've done our project very smoothly because it is a serial process. For solving any problem or for any system development, the whole work should be handled in that segment so that accuracy can be provided. So we have followed the work flow to increase accuracy. Due to the six stage features and feedback scope system, our system uses work flow. Our work flow feature can return it to the previous step. We can return and correct the system at any time according to the requirement. In this work flow, before completing the next stage, each stage must be completed completely. Such a work flow is basically shirt and no uncertain requirement from the project as each stage of determining the project is going on in the right direction and whether to continue or cancel the stage in this system, Arduino and different sensors are used with along with cloud computing concept.

Firstly, all sensors which are interface with Arduino will sensors the parameters related to water such water level and flow rate of water. Reservoir side module calculates water level present in it send data regarding water level present reservoir to central office on daily basis.

This module contains ultrasonic sensor to sense the water level and communicates with Arduino to process operation such as calculation of water present in reservoir and volume data send to central office using IoT. These sensed parameters are further give to Arduino for processing. Arduino will receive this data and send it to the cloud through serial communication.

IV. Design

In this system, Arduino and different sensors are used along with cloud computing concept. Firstly, all sensors which are interface with Arduino will sense the parameters related to water such water level and flow rate of water. Reservoir side module calculates water present in it and sends data regarding water level present in reservoir to central office an dally basis.

This module contains ultrasonic sensor to sense the water level and communicates with Arduino to process operation such as calculation of water level in reservoir and flow of water information is send to server room using IoT and display on LCD. These sensed parameters are further given to Arduino for processing Arduino will receive these data and send it to the cloud through serial communication as Shown in below figure 4 Hardware model.

Cloud app is the advance concept which we are going to used for this system.

Basically a web page will be created where the data will be monitor and manage from the server room.

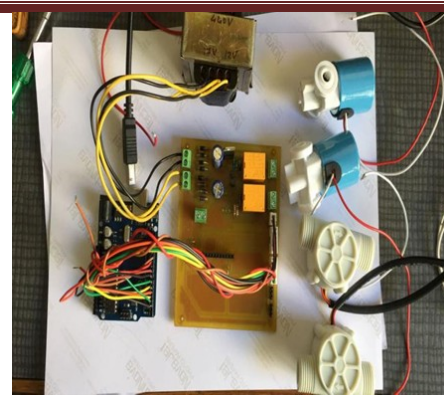

Figure 4. Hardware Model

IV. Hardware

Internet of Things

The IoT allows to get the values from the any object, sensor from controller and send to the remotely across persist network infrastructure.

The advantages of IOT for iincrease accuracy, efficiency, economicbenefit to reduced people intervention from the any condition.

The internet of thing is the physical device other items embedded with electronics software, sensors, actuators also network connectivity which enable this object to collect an exchange data.

IoT menace wireless communication so, IOT expected to offer advance connection of devices, systems and services that goes beyond machine -to- machine communication and covers a verity of protocols, domain and application.

Arduino

Arduino controller is open sources hardware for controlling the multiple sensors. Arduino board designs use a verity of microprocessor and controller.

The Arduino is a micro-controller board, bases on the ATmega328 IC.

It consist everything required to support to the micro-controller simply connected it to pc with a USB cable with a AC to DC adapter, battery will be get started. The boards are equipped to various enlarge boards and other circuits. The entire sensor can be interface with Arduino**.** It has 14 digits input and output pins, a 16 MHz quartz crystal frequency, 6 analog inputs, power jack, USB connection, a header ICSP and reset button.

Level Sensor

Level sensors used for the measure the water level present in tank. The designed sensors which can establish the water present in a tank. This sensor established water level can then be communicated to the main servers which are deployed for the objective of capable water management, distribution. This information is passed on a regular basis on to the main server and shows the water level is present in the tank.

Ultrasonic module ranging HC-SR04 gives 2cm-400cm ir-resistive measuring function, the range accuracy up to 3mm. If the level sensor are 4 pins echo, trigger, ground, VIN. The sensor can measure the level of water.

Flow Sensor

Flow sensor is the fast flow rate which proportional standard output a series of pulses that to interrupt them it necessary to implement a frequency component.

Supplying water according to real time which effective water management, such measuring water is very essential step in water management system.This sensor working on

hall- effect that outputs will be a pulse rate proportional to flow rate. In this project used to the flow sensor to measure flow of water. Flow sensor shows the flow rate of water .which display on LCD and control room.

Solenoid Valve

In rest position, the plunger closes of a small orifice. An electric current passing through the coil generates a magnetic field.

e ISSN 2348 –1269, Print ISSN 2349-5138
Marathwada Mitra Mandal, Pune

The magnetic field exerts a energy on the plunger as a result the plunger is depart towards the center of the coil, so that the orifice opens. This is the principle of solenoid valve which can open and close automatically. A solenoid valve is the combination of electronics and mechanical control valve, features a solenoid, and is an electric coil having movable ferromagnetic core in its center.

LCD Display

This means 16 characters, 2 lines on the LCD display. If an 8 bit data bus. There is three control lines EN, RS and RW. RW= read/write, EN= enable, RS= register select. When RS =0; data is consider as command, RS=1; data begin send is text data/W =read/write. When RS=0; data wrote on to the LCD and when RW=1; data read to the LCD. Most of the time control room is not work any interrupt that time LCD can be worked then level of water and flow rate of water display on LCD.

Wi-Fi Module

The ESP8266 is the Wi-Fi module as interfacing server to send the sensors values to the server. The ESP8266 is used for the hosting an application. We have to Offloading of all Wi-Fi networking from another application processor. Wi-Fi module can be connection between server room and tank.The Wi-Fi module range is more that other component, so we can use the Wi-Fi module to the long distance communication.

Mositure Sensor

The moisture sensor is one of the interfacing with Arduino for the purpose of in this project to detect leakage of water in respective area. The working of sensor is to detect leakage of water to detect at high level; automatically solenoid valve will be off, at normal condition valve on with respect to time period.

VI. Result

We have identified a suitable model that consist of different sensor devices and other modules there functionality are show in figure. In this model we used ATMega328 with Wi-Fi module. Inbuilt ADC and Wi-Fi module connect to internet through embedded device. For monitoring Sensors are connects to Arduino board ADC will convert corresponding readings to its digital value also from given value can evaluated by corresponding environmental parameters.

After sensing the data for different sensor devices, which are placed of interest. The sense data will be generally sent to server, when accurate connection is established with server device.

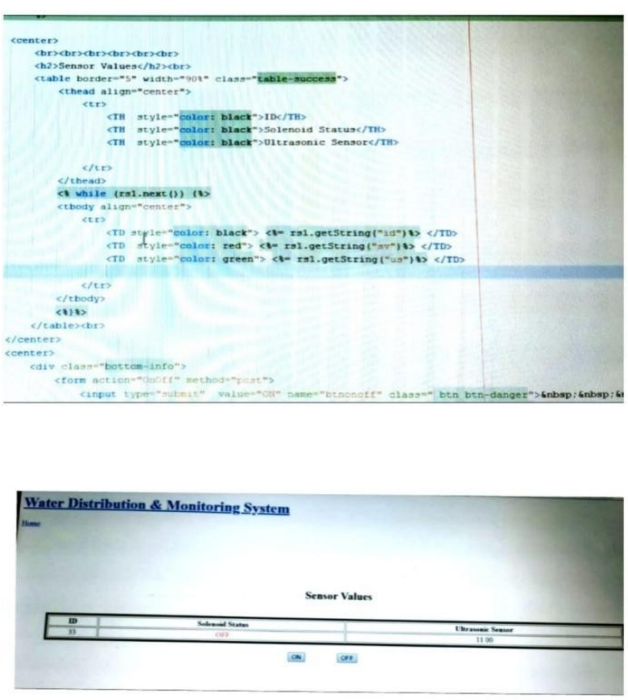

Figure 5. Web Page Programming

VII. Conclusion

IoT based water resource management can be useful for monitoring, tracing and mange the remote location valve and meters.

In conventional systems a person is employed for such remote location valves and meter management.

In this project our aim is to focus on different applications of IoT in water resource engineering which reduces human effort overcomes the drawback in the conventional system the implementation is going to be done for few tanks. The data collected can be used for further analytics like consumption, forecasting, water leakage detection.

IX. Future Scope

The IoT has encouraged people to connect to devices using the internet and the increasing the use of IoT devices motivated people to use smart technology one of the main challenges in smart water monitoring and distribution is managing the cost, energy, efficiency required for water distribution system.

The future work will focus on developing and IoT architecture in water distribution system with integration of new technology such as energy harvesting.

In future we can add PH sensor and conductivity sensor in the given model for detecting the PH level and conductivity of water supply.

X. References

1. Made Sarswati, EndrowednesKuantama, PnonMardjoko, "design and construction of water level measurement system accessible to SMS", 2012
2. anjana S1, sahana M N2, Ankit S3, K N Natarajan4, K R Shobha5," An IoT based 6LoWPAN enabled experiment for Water Management", IEEE ANTS2015
3. Dini,P.;Boutab,R.;Logrippo,L.;eds(1997).Feature interaction in telecommunication networks.
4. Asaad Ahmed Mohammedahmed Eltaieb,Zhang Jian Min,"Automatic water level control system",International journal of Science and Research (IJSR)2013.
5. https://create.arduino.cc
6. https://www.libelium.com/smart-water-sensors-to-monitore-water-quality-in-rivers-lakes-and-the-sea/
7. http://asclibrary.org/doi/abs10-1061-41203(425)122

e ISSN 2348 –1269, Print ISSN 2349-5138
Marathwada Mitra Mandal, Pune

Demonstration of Intelligent Cooperative Vehicles

Chaitanya Kulkarni, Viraj Mete, Pooja Dhumal & Prof Disha Parkhi
B.E. Students,
Marathwada Mitra Mandal's College of Engineering Karvenagar,
Pune, India

ABSTRACT: *The main aim of this project is to demonstrate the concept of Cooperative Adaptive Cruise Control in real traffic situations. This concept improves the flow of traffic and reduced the unintentional acts happening on roads by intelligent and reliable communication between vehicles. It reduces the complexity and increases performance of the device by the virtue of wireless communication. Systems will provide the facility of obstacle detection hence they will be communicating with cooperative vehicles and share their current status and will act accordingly. The proposed system is based on ARM controller by achieving features like vehicle to vehicle communication (V2V), Lane chasing, Automatic speed adjustment, Steering angle measurement and obstacle detection.*

Keywords: *V2V Communication, CACC, ITS, Steering Angle Measurement, ZigBee.*

1. Introduction

As the technology is advancing the demand for intelligent vehicle system has been increased. Consequential developments in transportation system have been achieved during the previous years. Intelligent systems which are based on real time application have been contributing in improving traffic flow and safety from collisions between vehicles. To improve transportation system the concept of vehicle to vehicle communication can be introduced to acquire more substantial and reliable details about vehicles on roads and highways or express ways.

The concept of cruise control came in early 1900s. Cruise control is a concept in which a speed is set by the driver and vehicle will maintain that speed without any safety. The main limitation of such system is that it increases risk of accidents. In late 90s the concept of Adaptive cruise control came into picture by adding features like automatic speed adjustment. In adaptive cruise control concept the braking system was not up to the mark and more efforts were to be taken by the drivers.

Cooperative Adaptive Cruise Control (CACC) basically provides Intelligent Transport System (ITS). Using wireless communication, possible risk cases can be identified as earlier to avoid crashes, and more substantial details about other vehicles movements can help to improve performance of vehicle. Research have been done throughout the world to explain the demand for a suitable vehicle to vehicle communication system and its possible applications.

V2V communication reduces the amount of unintentional acts and focuses on improving collision avoidance and safety. The supplementary of the available system which is adaptive cruise control can be replaced by cooperative adaptive cruise control (CACC). System has a high potential to improve traffic flow capacity and smoothness, reducing congestion on roads, highways or express ways. If the system detects any obstacles just ahead of it, then it will communicate with the preceding vehicle and will alert the preceding vehicle about the obstacles. After obstacle detection, vehicle will reduce its speed automatically. Vehicle works more intelligently by adding V2V Communication. In addition with V2V communication, System is provided with other features like lane chasing, automatic speed adjustment and steering angle measurement.

2. Methodology

The main motive of this research is to build a system which can be fitted in a vehicle and help to avoid collisions or accidents happening on road or highways. The system is provided with ARM controller, Motor drivers and sensors like ultrasonic sensor, IR sensor pair, steering angle measurement sensor (HMC or QMC) and Light dependent register (LDR).

2.1 Research

This system was implemented in two phases which were cruise control and adaptive cruise control. As disscused in introduction about these systems, they were having certain drawbacks like they can't be implemented in real traffic situation as well as braking system was quite inadequate. In these system all drawbacks will be overcame.

Cooperative adaptive cruise control not only avoids any unintentional acts but also provides flexibility in traffic flow. In CACC system the speed of vehicle will reduce accorfing to the position of obstacle or succeceeding vehicle.If compared with systems like cruise control and adaptive cruise control, CACC provides additional features like vehicle to vehicle (V2V) communication, Lane chasing, Automatic headlights ON/OFF operations and antilock braking system.

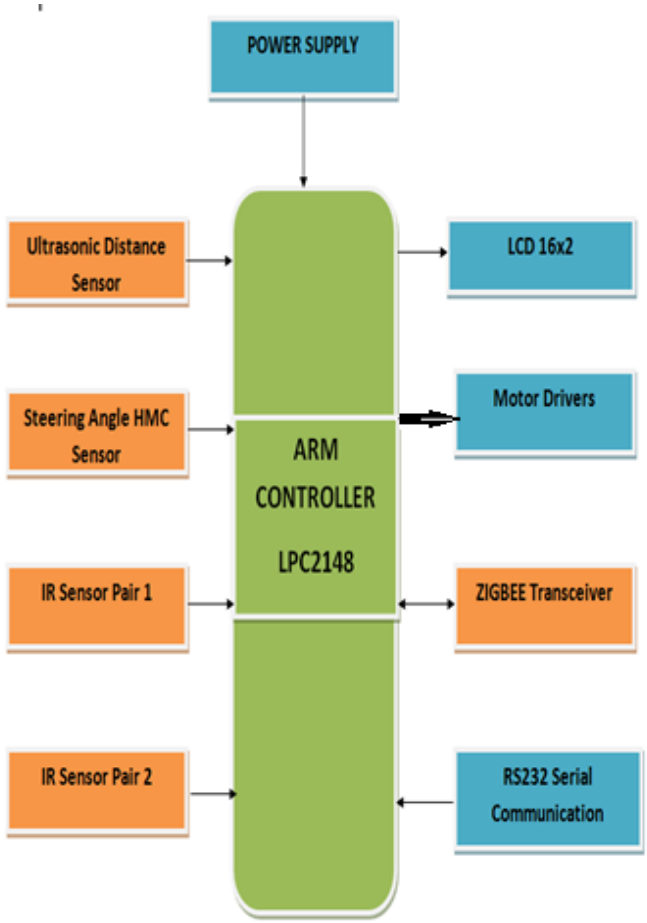

Fig. 2. Block Diagram

2.2 Controller

This devive can be impelented using various controllers like ARM, Arduino or AVR. For this research ARM LPC21XX is used. ARM is a 32 bit controller having 64 pins in which 48 pins used for general purpose input/output applications.

ARM has certain advantages over Arduino and AVR. ARM provides high speed operation with very low power consumption. ARM provides communications protocols like UART, I2C, SPI and Ethernet. ARM is relatively cheaper than Arduino and AVR.

2.3 Flow of Operation

e ISSN 2348 –1269, Print ISSN 2349-5138
Marathwada Mitra Mandal, Pune

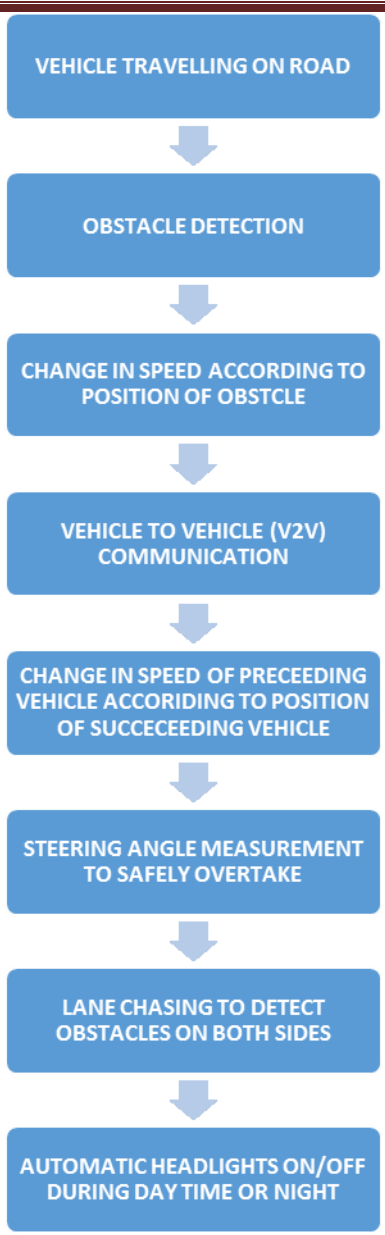

Fig. 1. Flow of system implementation

2.4 Obstacle Detection

Whenever the vehicle travelling at certain speed, dectects any obstacle in front of it the system starts working. As the ultrasonic sensor is continuosly transmitting sound waves it will measure the distance between the vehicle and the obstacle by receiving sound waves reflected back by the obstacle in certain duration.

Ultrasonic sensor has multiple pins namely trigger, echo ,Vcc and ground. Ultrasonic is split into three broad categories that are transmitter, receiver and transceiver. Transmitter coverts electrical signal into ultrasound, Receiver converts ultrasound

signal into electrical signal and transceiver can be transmit and receive ultrasonic signal. Controller will get the signal from ultrasonic sensor and motor driver interfaced with the controller will act accordingly. System will reduce its speed according to the position of obstacle. At certain safe distance vehicle will stop automatically due to antilock braking system.

2.5 Lane Chasing

For more control over vehicle system is provided with IR sensor pairs which are placed on both left and right side of the vehicle for lane chasing on the Roads, Highways or Expressways. An infrared sensor is an electronic device that emits infrared signal in order to sense some aspects of the roads. An infrared sensor is passive sensor which is comprehensively used in electronic systems. This sensor is used to detect barrier or stumbling block. The fundamental concept of an Infrared sensor is used as detect obstacle and infrared signal is transmit ,that infrared signal bounces from the superficial of an object and the signal is received at infrared receiver.

2.6 Steering Angle Measurement

For steering angle measurement, HMC Sensor is used. it has 3axis compass with magnetic ball . It is designed in which magnetic ball facing towards the north according to that angle is measured. It has high resolution and low power consumption.

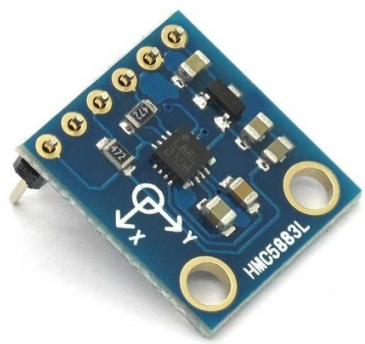

Fig. 3. Steering Angle Measurement Sensor

The steering angle sensor is used to determine the position and behavior of front wheels. The sensor is interfaced with a motor driver IC which will control the steering angle for better safety. Depending upon the steering angle the motor driver IC which is interfaced with the controller, will decide the further movement of the vehicle. The sensor measures the steering angle in degrees.

2.7 ZigBee

For serial communication purpose, Digi ZigBee 802.15.4 modules are used. ZigBee is used for communication between cooperative vehicles which are coming in each other's range. ZigBee provides the main objective of vehicle to vehicle (V2V) communication for more cooperation between two vehicles. It is simple to use and cheaper in cost compared to Wi-Fi module. The communication type is line of sight communication. Outdoor range is up to 300 feet (90m). And indoor range is up to 100 feet (30m). Data rate for ZigBee module is up to 250kbps. Frequency band is 2.4GHz and it is accepted world-wide.

Fig.4. ZigBee Module

e ISSN 2348 –1269, Print ISSN 2349-5138
Marathwada Mitra Mandal, Pune

It consists of three main element that are coordinator 'C', Router 'R' and End device 'E'. There is always one coordinator in a network which acts like a parent or root in a network. In CACC the coordinator will a vehicle which will perform operation like data transfer. During obstacle detection the coordinator stores the current status and handle information of the vehicle. Router acts as an intermediate device between coordinator and end device to provide transfer of data. The coordinator is supported by various routers. Routers can pass the information in bidirectional form. The number of Coordinators, routers and end device depends on the requirement and type of network.

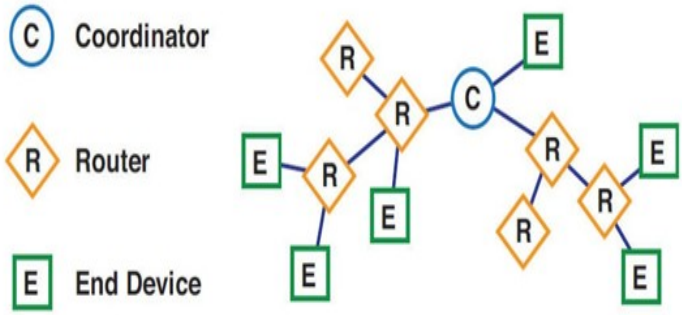

Fig. 5. ZigBee Network

3. Scope and Limitations

By achieving various objectives in cooperative adaptive cruise control we can get more control and cooperation between two vehicles. This system can be implemented in real traffic situations. Further improvements can be made in this system by adding GPS technology, Sensing with camera and RADAR system. Some limitations of this system are that vehicle is not fully automated, long range and high accuracy sensors are required.

4. Conclusion

The CACC concept helps to improve flow of traffic and decreasing unintentional acts on the highway or expressways. CACC helps to achieve cooperative vehicles communication and improve the cooperative and intelligent transport system. The demonstration model of system is given below.

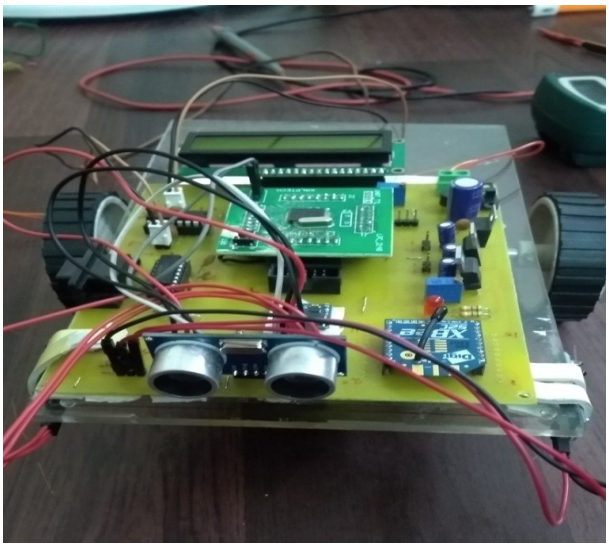

Fig. 6. Final Demo-type

5. References

1. Vicente Milanés, Steven E. Shladover, John Spring, Christopher Nowakowski, Hiroshi Kawazoe, and Masahide Nakamura, "Cooperative Adaptive Cruise Control in Real Traffic Situations" IEEE TRANSACTIONS ON INTELLIGENT TRANSPORTATION SYSTEMS, VOL. 15, NO. 1, FEBRUARY 2014.
2. Byungkyu (Brian) Park, Kristin Malakorn, Joyoung Lee "QUANTIFYING BENEFITS OF COOPERATIVE ADAPTIVE CRUISE CONTROL TOWARD SUSTAINABLE TRANSPORTATION SYSTEM", Virginia Department of Transportation and U.S. Department of Transportation Research and Innovative Technology Administration, May 2011
3. Andrew H. Sloss, Dominic Symes, Chris Wright, "ARM System Developer's Guide".
4. UM10139 LPC214X User Manual, Rev. 4- April 2012.
5. 3 Axis Magnetic Sensor QMC5883L Datasheet
6. DIGI XBEE S1 802.15.4 RF MODULES Datasheet.

e ISSN 2348 –1269, Print ISSN 2349-5138
Marathwada Mitra Mandal, Pune

Sprinkler Automation for Accurate Pest Control on Crops

Mohini Kesare, Shital Domle, Sumit Rajegore, Prof. V. B. Deokamble
Department of E & Tc,
Marathwada Mitra Mandal's College of Engineering,
Pune, India

ABSTRACT: *Sprayers are used to control excessive use of pest and diseases and it is done by spraying of pesticides. By conventional method of spraying, it is difficult to spray the pesticide uniformly and effectively over the crops. Spraying is done in farm by traditional technique. There are different types of sprayers, but mainly used sprayer is backpack type sprayer, which is used by farmers. It has advantages like it is cost efficient, easily available and easy to use. With the help of this sprayer, farmers spray pesticides in their farm, but it has high operational cost and also requires lots of time. Farmer who is spraying pesticides is affected by it, as it is harmful to health. They are also affected by shoulder disorder and lumbar pain due to weight of machine and weight of tank on person`s shoulder. Because of this pesticide many diseases are faced by farmers and this is one of the serious problem. Though traditional method gives good pest control, it requires large volume of liquid per plant, large amount of time.*

To overcome these problems sprinkler automation technique which reduces human efforts and also distribute the pesticide uniformly through the crops is used. This system is used to spray the pesticide to different crops in an efficient manner to different crops. It gives good pest control and also consumes less volume of liquid per plant. This paper contains the efficient automation technique which overcomes all the problem faced by traditional technique.

Keywords: *ATMEGA328 Microcontroller, Battery, IR sensors, Up-down mechanism, Relay, Motor drivers, DC Motors, Pest control, Agricultural architecture.*

1. Introduction

Crop yield is decreased due to attack of pests, diseases and weed. For controlling most insects, weeds and diseases chemical control method is used. By using pump or dusting, chemicals are spread on the crops either by sprinkling or spraying. To apply small volume of spray liquid to protect crops, spraying is one of the efficient as well as effective method. Power operated hydraulic sprayer and high or low volume hydraulic sprayer which can be manually operated is used in traditional method. In this method, time and labours required are more. By conventional method of spraying, it is difficult to spray the pesticides uniformly and effectively over the crops. Therefore in proposed system the efforts are made to design and implement automatic technique for accurate pest control on crops. The main objective of this system is to protect environment from pollution by over use of pesticide. For precise output and accuracy of industrial process IR sensors with up down mechanism is used. Our proposed works aims towards protecting crops by excessive use of pesticide by an automated way instead of using manual way. It is aimed to reduce human effort and at the same time increase the productivity & accuracy levels that cannot be achieved with manual operations. This system consists of IR sensors, up down mechanism, DC pump for pesticide sprinkler. First IR sensor is used to detect plant and second IR sensor is used to detect plant height along with up down mechanism so that sprinkler will move accordingly. Up down mechanism is for sprinkler up down according to the plant height. Microcontroller is a control unit which controls the whole working.

2. Block Diagram

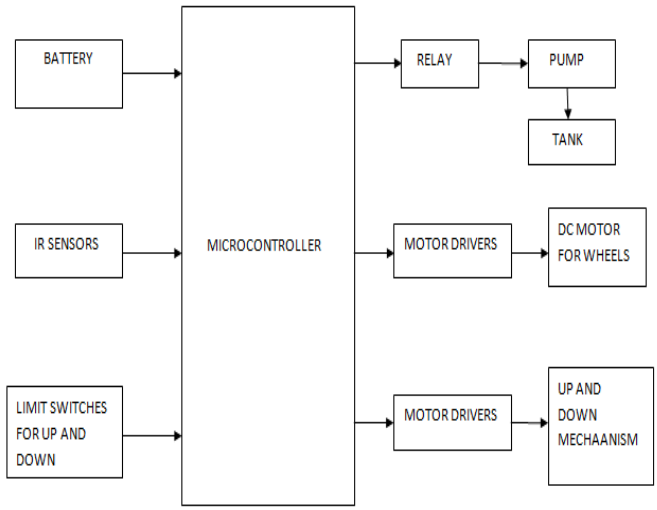

Fig 1. System Block Diagram

3. Working Principle

This system consists of IR sensors, up down mechanism with limit switches, DC pump for pesticide sprinkler. First IR sensor is used to detect plant and second IR sensor is used to detect plant height along with up down mechanism so that sprinkler will move accordingly.
Up down mechanism is for sprinkler up down according to the plant height. Microcontroller is a control unit which controls the whole working.

Below picture shows the overall view of our proposed system

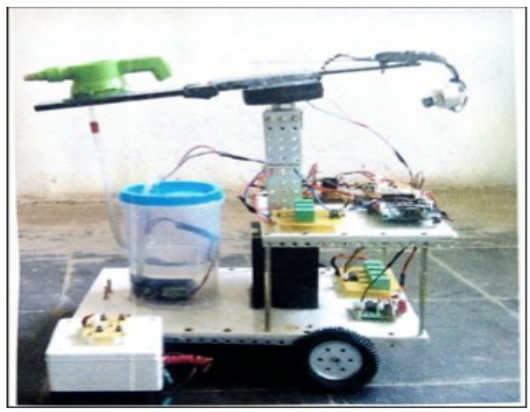

Fig 2. Overall proposed system

4. Hardware Implimentation

This system consists of 7 hardware components namely ATmega327 microcontroller, IR Sensor, Motor Drivers, Relays, DC Motors, Limit Switch, Battery.

4.1 Microcontroller

In this system we are going to use ATMEGA 328 microcontroller. The ATmega328 is a single-chip microcontroller. Arduino Uno is a controller board based on the ATmega328. This is an open source platform. Following are the features of Arduino Uno:
Operating Voltage : 5 V
Input Voltage : 7-12 V.
Digital Input / Output pins: 14

e ISSN 2348 –1269, Print ISSN 2349-5138
Marathwada Mitra Mandal, Pune

DC current per I/O pin : 40mA
Clock Speed : 16 MHz.

4.2 IR Sensor

An infrared sensor is an electronic device. This sensors are used for detection of object. We use two IR sensors, one for detecting the plant and second is for detecting height of the plant. This sensors can detect the object between 1 to 5 meters.

4.3 Motor Drivers

Motor Driver circuits are current amplifiers. Motor drivers are made from discrete components which are integrated inside an IC. The input to the motor driver IC or motor driver circuit is a low current signal.

4.4 RELAYS:

To open and close circuits electromechanically or electronically relays are used. By using a signal without any human interference, relays are used to break or make contact.

4.5 Limit Switch

Motion of a machine part or presence of an object is the working principle of limit switch. They are used for controlling machinery as part of a control system, as a safety interlocks, or to count objects passing a point.

4.6 DC Motor

To convert direct current electrical energy into mechanical energy we use DC Motors.
There are various types of motors are available among them we use shunt DC motor. Shunt motors are used because we require constant speed at starting conditions.

4.7 Battery

There are various types of batteries are available among them we use Sealed Lead Acid Battery. This is rechargeable battery with voltage 12 and its rated current is 1.3AH.

5. Flow Chart

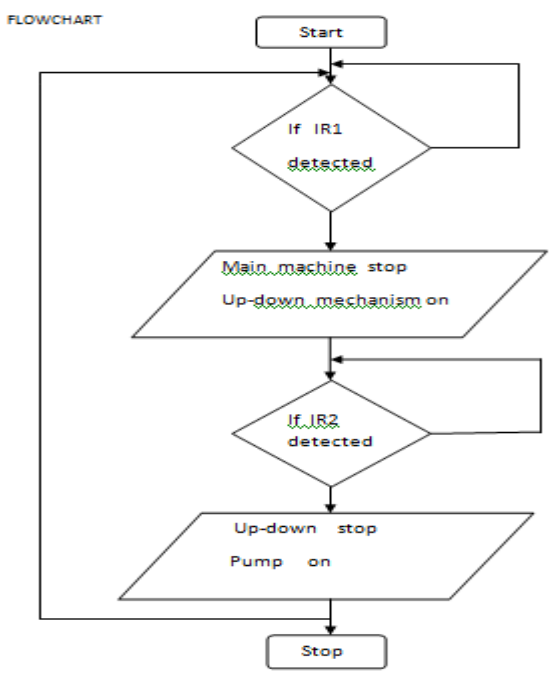

Fig 3. Flowchart

6. Algorithm

Step 1: Start the process.
Step 2: Check whether the first IR sensor is detected or not.
Step 3: If Sensor is detected then main machine stops and up down mechanism gets started.
Step 4: Check whether the second IR sensor is detected or not.
Step 5: If second sensor is detected then up down mechanism stops and pump gets on for some delay.

7. Conclusion

According to the design and algorithms proposed in the paper we come to a conclusion that, this type of system is very helpful for agricultural purpose where, we need to spray the pesticides on different crops. Currently we use a system that increases the human efforts and also it is not comfortable. This system provides a method to decrease the wastage of pesticides and also the human efforts. It is more effective than traditional system.

8. Future Scope

In future we can implement this system, that can give indication after completion of pesticide.
To recognize the finished activity of pesticide, we can use GSM module to send the message.

9. References

1. Mathew, V.J., Desh, S.K., Das, D.K. and Pradhan, S.C. (1992)."Development and testing of a power tiller-operated boom sprayer,"AMA, 23(4):25-27.
2. Muhammad Iqbal, Hussain Altaf and Munir Anjum (2006).
3. Pak. J. Agri. Sci "Evaluation of spray uniformity distribution by environment friendly University boom sprayer test bench", 43 (2) : 93-96.
4. Padmanathan, P.K. and Kathirvel, K. (2007). "Performance evaluation of power tiller-operated rear mounted boom sprayer for cotton crop", Res. J. Agric. & Biol. Sci., 3(4):224-227.
5. Sahay, Jagdishwar "Text book of elements of agricultural Engineering,"(2008) pp. 233-235.
6. S R Kulkarni, R V Nyamagoud, Hareesh Naik, Mohan Futane,"Fabrication of Portable Foot Agricultural Fertilizers and Pesticides Pump" .
7. Laukik P. Raut, Smit B. Jaiswal, Nitin Y. Mohite, "Design, development and fabricationagricultural sprayer with weeder"
8. Sarvesh Kulkarni, Kara Hasurkar, Ramdas Kumbhar, Amol Gonde, Raut A.S.,"Review of Solar Powered Pesticide Sprayer

e ISSN 2348 –1269, Print ISSN 2349-5138
Marathwada Mitra Mandal, Pune

Image Text to Speech Conversion Using Raspberry PI

Mrunali Garud, Abhishek Dodke, Vaibhav Nirphal, Prof. M. R. Pangaonkar
B.E. Student,
Marathwada Mitra Mandal's College Of Engineering Karvenagar.
Pune, India

ABSTRACT: *This project is based on prototype which helps user to hear the content of text in image into speech. It involves the extraction of captured image and convert into speech. This image capturing processes is done using raspberry pi, camera module and speaker.*
Optical character recognition (OCR) technique is used to extract the image. The output of OCR is in the form of text file. This text file is used to differentiate the image using OpenCV library. The tesseract is used for processing the image & produce speech at the output using TTS. This conversion time is few milliseconds. This device is useful for peoples who are not able to read the English language.

Keywords: *text to speech (TTS), OCR, tesseract, raspberry pi, camera module, speaker*

1. Introduction

In today's world image processing is mostly used for improving image quality. It uses various techniques like image filtering, image segmentation, morphological operation & image compression etc. In this project these features are used for converting text image into speech.
The main purpose of this project is to convert input text in image into speech. This conversion time is few milliseconds.
"Image text to speech converter using raspberry pi" is to use input image &converting into the speech using various technique. To capture the real time image is done using camera module at input side. This captured input image is processed by using optical character recognition technique. The OCR converts this text into machine encoded text.
Then the text to speech engine converts text to speech. The output is given to the audio amplifier which is connected to the speaker. The graphical user interface (GUI) is used for user to interact with electronics device through the graphical icons.

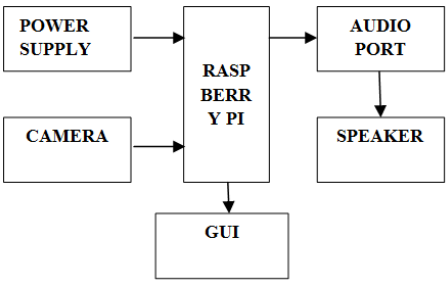

Fig. 1 Block diagram of TTS

2. Methodlogy

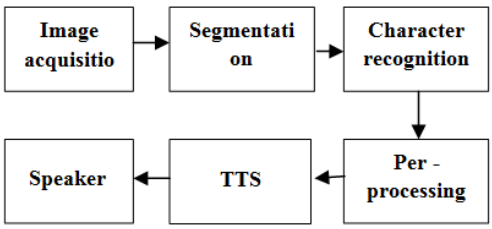

Fig. 2 Block diagram of OCR

The OCR is consist of two main parts image processing and voice processing. The image processing includes the capturing of image and converting into text. The audio processing includes the converting of text into speech.

A. Image Processing

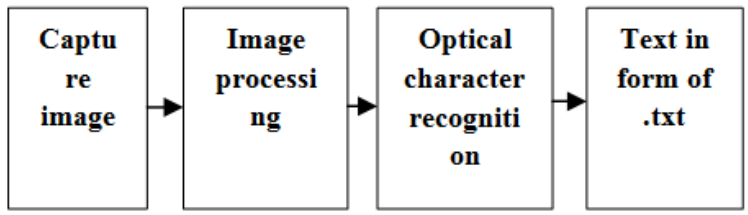

Fig. 3 Block Diagram of Image Processing

The method of OCR is used to capture the image and it convert into the text which can be processed further. This text image is stored in the form of jpg or jpeg. The colour image (RGB)is capture through the camera module and converted into the Gray scale and remove the noise from the image and obtain the pure black and white image and this image is segmented. After the segmentation the character is recognized by using the tesseract database method in OCR.

B. Tesseract

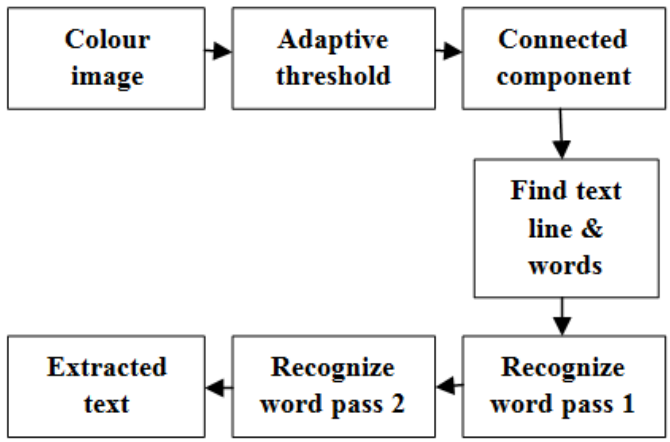

Fig.4 Block Diagram Of Tesseract

The tesseract library is installed in raspberry pi. In this library there are many characters are stored which helps to find the proper segmented words. The tesseract cannot handle the colour 24or 34 bit. It can read only 1 bit binary image or 8bit gray scale fixed in2.04. The minimum character size read by the tesseract OCR engine is 20 pixels uppercase letters.
It has apache licenses version 2.0 and it is sponsor by Google from 2006 in 2006 tesseract was very famous because there is nothing competitive for the OCR

C. Voice Procssing

The voice processing is done using OCR which converts the stored or real time text image into the speech at the output.

e ISSN 2348 –1269, Print ISSN 2349-5138
Marathwada Mitra Mandal, Pune

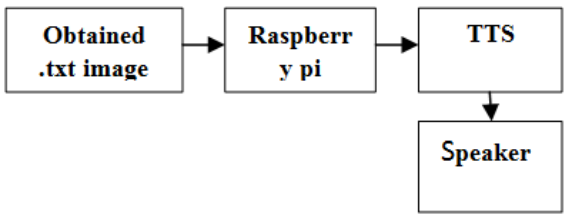

Fig. 5 Block Diagram of Voice Processing

In image processing the noise is removed from the image which are processed by the tesseract and given to the "Text To Speech"(TTS) converter. In this TTS the text is converted in the form of speech. TTS uses many filter which removes the noise from the voice output and gives the better quality voice output to the speaker. Espeak is a open source speech synthesizer which is used to English as well as other languages for linux & windows. Espeak is compact in size. It is totally about 2MH bit. Espeak speech synthesizer "format synthesis" method which allow languages provided in small size. If some noise is added during processes Espeak rectifies the noise & operates in high speed. The output side we get audio speech which can be heard through the speaker or headphone.

2. Design and Implementation

A. Hardware

1) Raspberry PI 3B Module

a. 1.2GHz quad –core ARM cortex-A53(64Bit)
b. 1GB LPDDR2
c. Power-Micro USB socket 5V1,2.5A
d. Ethernet-10/100 Base T Ethernet socket
e. Audio output-audio output 3.5mm jack
f. HDMI
g. USB 4 x USB 2.0 connecter
h. 15 pin camera connector

2) Web Camera

3) Speaker

B. Software

1. **Python**: python 2.7 version which is easy to learn. The programming language of python is simple to learn compared to other programming language.
   Python is beginner's language this language is very easy for a beginner level & supports the wide range application. This coding is very simple compare to other.
2. **RaspbianOS:** Raspbian is a operating system of raspberry pi. this is an open source system .
   ARM linux gcc is the cross compiler used. Boot loader is to initialize the hardware devices, establish memory mapping tables.
3. **Open CV:** OpenCV (open source computer vision). It is basically real time computer vision which is developed by the Intel. OpenCV uses numpy library for numerical operation ,. The basic working of open CV is converting the array structure into numpy array. There are 100-150 colour space conversion method in OpenCV but still we use two method widely used ones, RGB to gray& RGB to HSV.

C. Flow Chart

In above flow diagram show the web camera capture the input image and this proceed using following operation.

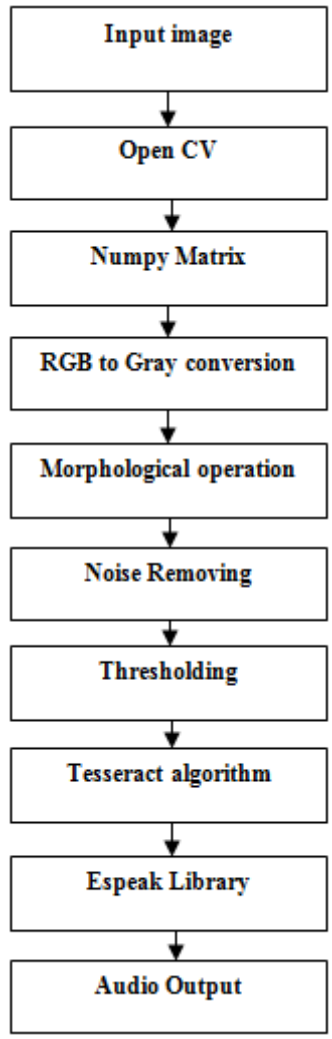

Fig. 6 Flow Chart

Open CV which is used for real time computer operation. It is developed by Intel. OpenCV python makes the use of numpy, is for numerical operation using matlab style syntax. All OpenCV array structure are converted to from numpy arrays.

This captured image is input image which is a RGB image. This image convert into gray scale image. After conversion of this gray scale image some morphological operation has been performed. Basically morphological is tool used for extraction of image this operation is doing by two methods Erosion and dilation. Both have opposite operation hence after all the operation we get noise free image.

Thresholding is the conversion of gray scale image into binary image. In tesseract the adaptive thresholding first take image as input & converting them into binary image. Adaptive thresholding can be performed by using some mathematical equation,

Thresholding value = highest pixel value + lowest pixel value /2

Tesseract is a open source OCR engine. Tesseract can work on black text as well as white text . Tesseract working on the following component :

- Connected component analysis: it takes binary image as a input image which obtained by adaptive thresholding.
- Find text line and words : It takes input as character outline from previous component and the outline are gathered together to form a blobs. These blobs sequence in the form of text line. The text line is broken down into words with help of space between the words.

e ISSN 2348 –1269, Print ISSN 2349-5138
Marathwada Mitra Mandal, Pune

- Adaptive classifier: In this the first process is tries to identify the words. The success fully identified words are passed to next classifier to recognize words accurately.

3. Result

The input colour image is captured through camera. This captured image is converted into gray scale using RGB to gray scale conversion. Thresholding technique is used to get the final output image. Thresholding produces binary image at output. This image is given to the tesseract engine. Tesseract produces image segmentation. Which will convert into text file. Then this image is given to the text to speech synthesizer which produces the speech at the output. voice is produced at the output. Use speaker or headphone at the output to hear the voice. The whole process is completed in 1-5 sec only.

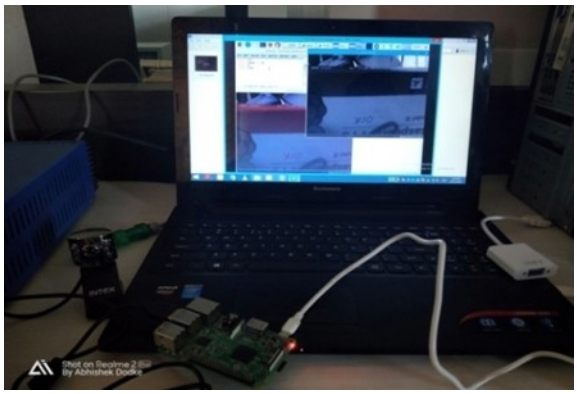

4. Conclusion

we have proposed an text in image to speech converter susing raspberry pi. The device is compact and helpful for blind person as well as society. This device converts sinput text into the speech. The time duration of whole process in approximately 8-10 milliseconds.

Future enhancements can be made in this system, which will help to convert the input text in different languages.

5. References

1. Falguni Patel, Dixita Patel, Talha Pathan, Anita BindraGujrat." Smart Reading System", International Journal Of Science And Research Engineering, March 2017.
2. VelmuruganD.Srilakshmi, Umamaheswari S, Parthasarathy S, Arun K, Coimbatore, India, " Smart Reader For Visually Impaired People Using Raspberry PI",**(Research Article)**March 2016.
3. Mrunmayee Patil, Ramesh Kagalkar, University Of Pune,India. " A Review On Conversation of Image to Text As Well As Speech Using Edge Detection And Image Segmentation", **(Research Article)** November 2014.
4. R.Smith, " An Overview of the Tesseract OCR Engine", International Conference on Document Analysis and Recognition(ICDAR 2007).
5. Nikhil Mishra (M.Tech Student, AGPCET Nagpur)," Image Text to Speech Conversion Using Raspberry PI & OCR Techniques", International Journal For Scientific Research & Development(IJSRD)\Vol. 5, Issue 08,2017.

Smart Ration Distribusion System using IOT

Kishor Kaushalye, Pankaj Gadade, Madhan Madhu, Prof. V. B. Deokamble
Department of E&TC,
Marathwada Mitra Mandal's College of Engineering,
Pune, India

ABSTRACT: *In year 1939,'Antyodaya Yojana' was Started By Government which is also known as public distribution system. Initially the project was help huge number of poor people o accomplished their primary need of Ration. But in few years the system is having gaping contentions issues which cause illegal smuggling of commodities an corruption from the agents or distributors. Hence the commodities were sold in open market for the benefit of the distributor. In This paper, we proposed a system where everything in the Rationing Systems is connected digitally and hens the entire process is controlled and monitored by the government body. This system gives direct communication between the beneficiary and the government with the help of distributor.*

Keywords: *ration System, Biometrics, BPL card, Digitalisation*

1. Introduction

As we know that our county is moving as digital country in the world. But still we are following the old paper work System. Due to the manual paper work system increasing the scam and corruption in ration system in our Country. By following the old paper work system it creating favourable path for corrupt officers and political leaders. Public distribution system is oldest system in India.

Public distribution system is developed for providing ration materials in minimum price for below poverty line (BPL) and moderate price for above poverty line (APL). APL and BPL ration cards provided by the government to user as per annual income record. In public distribution system government providing ration and it is distributed to different states then district then it has been provide ration to various ration shop in their areas then distributor been circulated ration to user. Due to This process it create easy path for scam and corruption. So we are proposing the system it provide solution to the existing system.

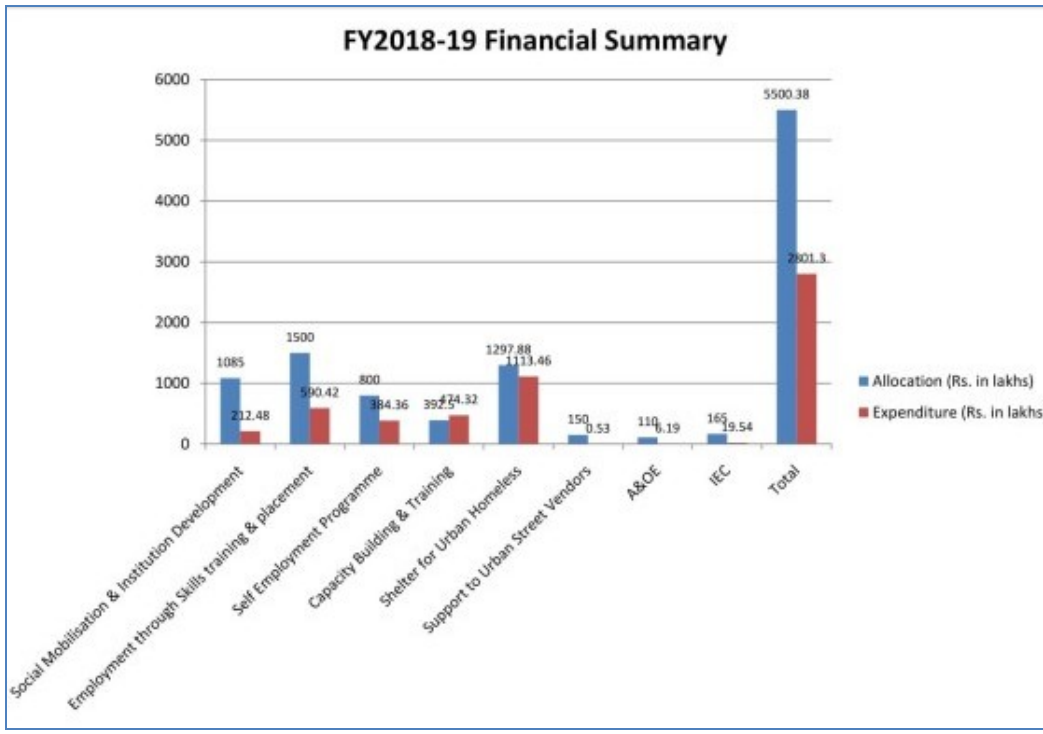

Fig. 1 Public Distribution system Supply and distribution

e ISSN 2348 –1269, Print ISSN 2349-5138
Marathwada Mitra Mandal, Pune

Biometric and Biometrics for ration card[1]. In the project we are focus on main three points

- How to overcome manual work in ration shop
- How to avoid corruption and scam in ration system
- How to be more secure in ration distribution .

System Develops in Three Parts

A. Providing smart ration card to user using biometrics by smart system. For identification of user biometrics mechanism is used.
B. IoT based of smart ration distribution system. That system is used for verification of customer by using biometrics and biometric. All the functions of embedded module stores data on the web portal.
C. Smart application is used for category or region wise data storage and also reporting to the Taluka and District level authority. It also checks the stock and displays remaining stock. Also new user registration is prepared through the web page application. User comes with its biometrics tag. Then users indentify by using that system that in existing shop if user is identify and smart card is also valid then ration will distribute and message will be sent to the users registered mobile number and if invalid then displays message user is not registered on system and the whole process is again continuing.

II. Literature Survey

A. Automated ration materials distribution users biometric tanks and IoT based smart application for ration card to use the benefits of govt. policy customer must examine the code by scanning of readers to the information of ration allocated to the specific users. The controller must verify the users details and amount of ration allocated to the users. Then customer has to select needed equipment's from this screen.
B. Biometric Assisted useful for identification of customer and RFID reader for detection of user authentication. The database are useful to store the records of users purchasing history.
C. Automation of Rationing System: System introduces atomization of ration distribution for different ration shop and also for saving the records and updates the entries in database; hence the shop holder cannot do any fraud with people.
D. Targeted Ration Distributed System with Smart Card using Biometric Device: This system provide smartcards for every citizen. That smart card provide the brief information of that specific user. User can able to access that specific amount of ration is available. User authentication and identification is done using RFID reader and fingerprint sensor[2].
E. This System is created for ration distribution in smartly and record also maintained in database. This smart system uses Public Distribution service for ration distribution
F. BIOMATRICS and GSM based Smart Ration Card As mention in paper as Ration System uses BIOMATRICS tag for validation and for user notification GSM system is used.

Existing System

The centre allocates Ration grains to states by considering the identified BPL population, the availability of Ration grains stocks, and the quantity of Ration grains lifted by states for distribution under TPDS. The allocation to a state changes every year depends on the state‟s average consumption over the last three years. Figure 2 there is huge difference between the allocated ration amount to this steps and its off taking amount of ration by states. Means lifting of ration is more than the allocated ration amount to the states from 2003-04 to 2011-12 i.e. in last 10 years. This implies that nearly 40% of off take is being leaked into the open market.

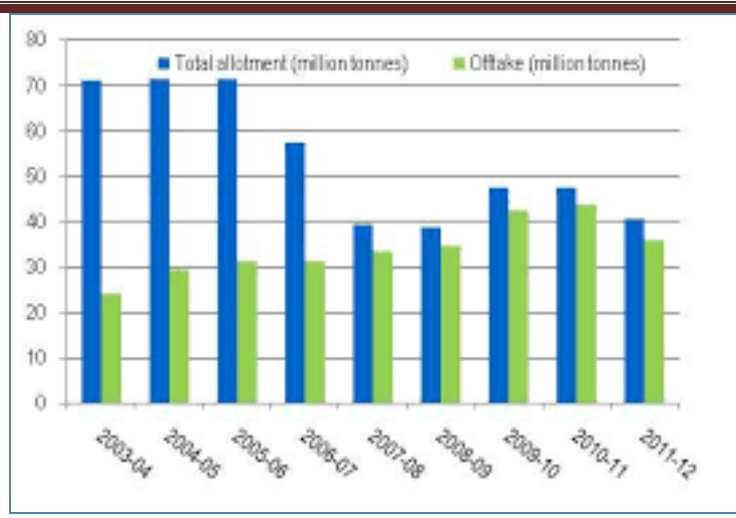

Fig. 2 Sources: PDS Portal, Department of Public Distribution; PRS

Ration distribution system means distribution of essential goods or ration to a large no of people. It is done by the government. This systems was started in 1939 in Bombay & then extend in other cities & towns.
For getting the proper attention to the ration system in 1942 under the govt. of India the dept. of ration is created. But now days, the major issue in this system the widely corruption & illegal smuggling of Ration. Every job in the ration shop involves manual work because of these all happens and there are no specific technologies ultimate to the jobs. In entire nation in the ration shops for giving the various ration like grain, oil, kerosene, etc. there are system employees. By going to ration shop the end user ask the distributor to give the ration by telling the needed amount of ration. The distributor then manually measures it & gives it to the end user. This distribution also needs to be added in to ration card. This systems faces with various problems, As there are many ration shops & the user coming to buy from ration shops are normally believes to be below poverty line & illiterate the end users are fooled to a large extent. Many more issues are there related to the quantity as well as the quality of ration end user will receive. And the quantity which is on ration card is not correct in this case the end user will collect more amount of ration in upcoming days according to their necessity. Hence there is more fraud & fooling of the customers that takes place[3].

Proposed System

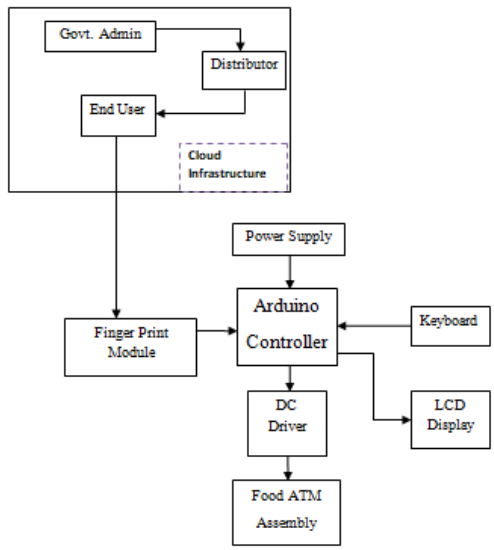

Fig. 3 Block diagram of Ration ATM distribution system

e ISSN 2348 –1269, Print ISSN 2349-5138
Marathwada Mitra Mandal, Pune

The electronic circuit includes motor driver, relay, power supply, driven IC Supporting LCD Screen. All this connected to the Arduino board.

Ration measuring systems consist motor valve which is connecting to Arduino board. The mechanical timing armament that is opening / closing of mechanical valve which done by Arduino. Motors driver IC used to drive the Motor.

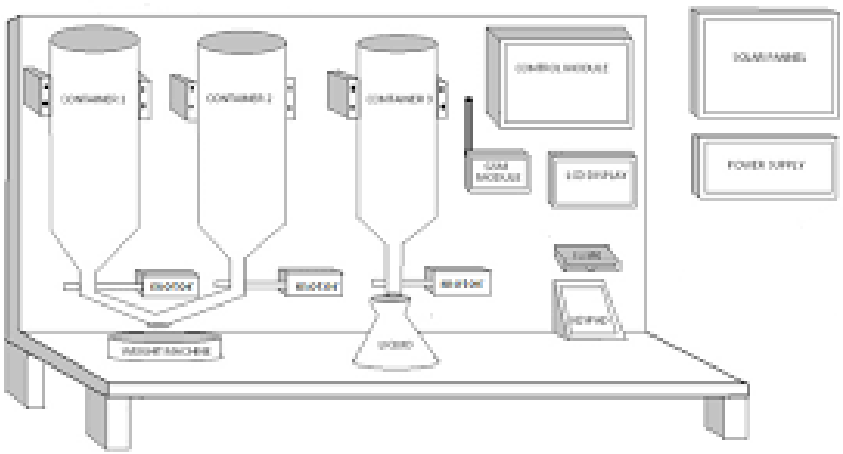

Fig. 4 Block diagram of Ration ATM distribution system

In this system, when govt., sends the ration to the customer and then system will be activated in the ration shops.

Every user stored their details in cloud systems. First he will verify thumb impression with information stared in the cloud system. If the customer is get validated from ration distribution system it will activated.

To start the systems we have to initialize Arduino, LCD, we observe motor , when user get validate system will ask quality for rice, wheat etc. According to requirements of the user the Ration will be distribute and when they ration distributed this system will get shop. Cloud is the availability of various resources in computer system, especially for data storage, it is based on sharing of resources. In this system cloud is used for communicating with Ration ATM as well as verification of data which is stored in virtual format in this system, in cloud there are different types of users.

1. Govt. Admin 2. Distributor 3. Family

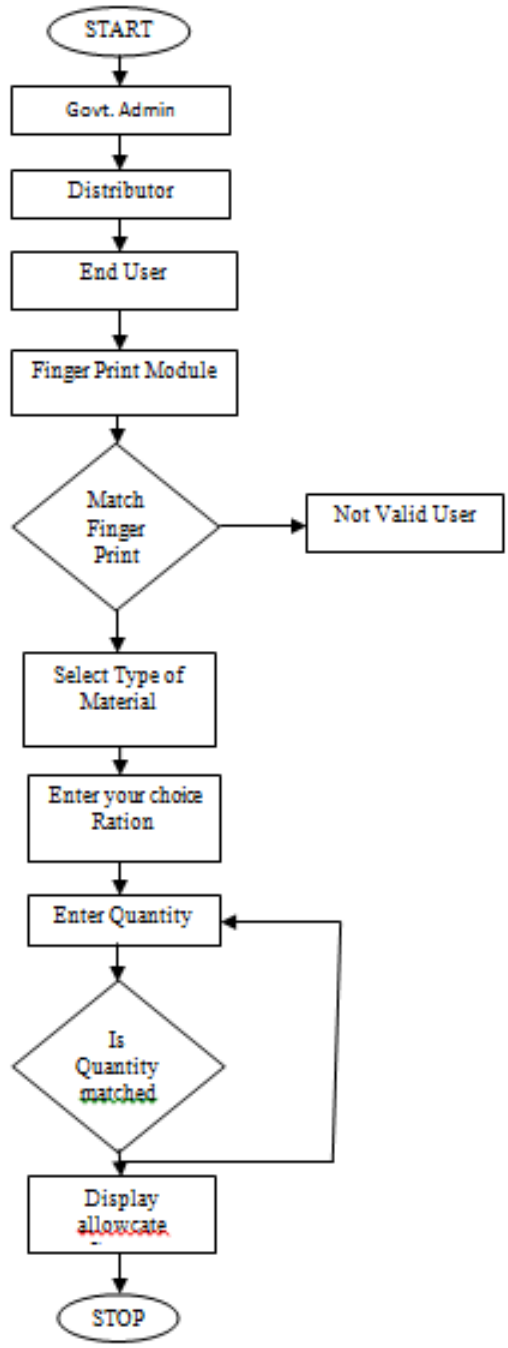

Fig 5. Flowchart of RDS

So in this system cloud plays an vital role which is use for verification, communication and storage of data. Govt. Admin verifies distributor as for particular family particular ration will be provided for that month. Distributor id going to verify those families who are authenticated by their thumb and it is linked to Aadhaar card. Once the families are authenticated by the thumb they can withdrawn the ration by Ration ATM, it is communicating with cloud for verification purpose once the user is going to withdrawn the ration after giving the thumb . In cloud the data of different families is there it is again authenticated by cloud how much ration is provided to the family and then the ration is substituted from distributor's account which is given by the Govt Admin.

e ISSN 2348 –1269, Print ISSN 2349-5138
Marathwada Mitra Mandal, Pune

Conclusion

Automated ration distributed system is based on IoT & RFID in place of ration card. But there are some drawbacks in the existing system, first one is that all the data is handled manually and there is no specific technology involved in the system, secondly if the ration are not took at the end of month, then they will sell to another customer who are unregistered user for this ration distribution system.

The above drawbacks are rectified by this system. After transaction the controller will send the information to the customer &also updated on web page. By using this smart ration distribution system we can avoid drawbacks in existing system.

References

1. Performance Evaluation of Targeted Public Distribution System" – Program Evaluation Organization Planning Commission Government of India New Delhi-2000
2. Yogesh Kumar Sharma, Dr. K.B. ShivaKumar, Srinidhi G. A., and Dr.Manoj Kumar-"Multi Modality Biometric Assisted Smart Card Based Ration Distribution System"- International Journal of Application or Innovation In Engineering & Management (IJAIEM)- Volume 3 Issue 6, June 2014
3. A.N.Madur, P.N.Matte-"Replacing traditional PDS with SmartPDS"- International Journal of Emerging Technology and AdvanceEngineering, Volume 3, Issue 12, December 2013.

IOT Based Smart Home Automation and Security System Using Android App

Priti Pathak, Sheetal Patule, Shubhada Kulkarni, Prof. R. R. Malekar
Department of Electronics And Telecommunication Engineering,
Marathwada Mitra Mandal's College Of Engineering,
Pune, India.

ABSTRACT: *In this modern world of digitization the life of humans is simpler as everything is automatic replacing the manual systems. In today's world internet is an important part of human life. IOT provides efficient way for allowing devices to sense and control remotely across a world network. In this project we focus on home security and automation using android app and internet. Using IOT we can control and monitor electrical and electronics appliances used in home. The devices connected to the relay module are controlled by the mobile application.*
Security is important aspect in our daily life. The given security system has developed to deny unauthorized access to home from intruders. This system provides security and automation with lesser power consumption and more reliability. The Automatic door open security system is achieved by using face detection and face recognition techniques. This system allow only authorized person to enter in home. Face reorganization is implemented by image processing on captured image and the image present in the database.

Keywords: *IOT,ESP-8266 Wi-Fi Module,PIR Sensor,Internet.*

1. Introduction

Wireless Home security and automation are two main aspect of this project. The currently build give permission to users to access and control home appliances remotely and send alert to the owner over android app using the internet if any unauthorized motion is sensed by PIR sensor near the door of owner house. Then camera capture image and send to owner on android app then owner identifies that the person is not intruder he or she can allow a person to enter in home..

Security is an important feature or factor in the smart home application. Most of the countries are bit by bit adopting the smart home security system. PIR sensor is used to for motion detection of human body. when motion detected by passive infrared sensor then arduino will give command to the camera module to capture image. Then captured image compare with database image .If captured image matched with database

Image then door will open automatically and if not matched then it will send to the owner over the android app. Owner will then recognizes that whether he or she is intruder or unexpected guest.

The automatic door open system is developed by using the face detection and face recognition techniques. This system allows only authorized person to enter in home. Intruder detection is performed by using image processing algorithm.

Internet of things provides a best way for allowing appliances to sensed and controlled remotely across a world. Using IOT we can control and monitor electronic and electrical appliances used in the home through internet. One of the aspects of our project is to make it possible to provide home appliances accessing remotely for saving lot of time. The devices connected to the relay module are controlled by the mobile application. Owner can access and controls home appliances remotely through mobile application. In this scenario android application sends the commands to the arduino over internet. After receiving commands arduino will take action accordingly.

Literature Survey

Voice Controlled Smart Home Automation System using Natural Language Processing (NLP) and of Things Of Internet

The primary goal of the project is to build a fully functional voice controlled smart home automation system using Internet of Things and Natural Language Processing in order to provide a cost-effective, best way to interact with home appliances. There are many smart home automation systems in the market that aim to automate the basic operations of these home appliances using various technologies such as GSM (Global System for Mobile),

e ISSN 2348 –1269, Print ISSN 2349-5138
Marathwada Mitra Mandal, Pune

NFC (Near-Field Communication) etc. However, most of these systems focus on mimicking the basic operation of the electrical switch. Our project aims at providing a whole automated voice based solution that our users can rely on, to perform more than just switching on/off the appliances. The user sends a voice command to the mobile device, which interprets the message and sends the appropriate command to the specific appliance. We plan on implementing four basic home appliances as a "Proof-of-Concept" for this project which includes Fan, Light, Coffee Machine and Door Alarms. The voice command given by the user is interpreted by the mobile device using Natural Language processing

Intelligent home automation system Using Arduino

This system provides cost effective flexible home control &monitor the system with the help of web page with IP connectivity for controlling home appliances remotely. The LDR and Temperature LM35 are used for automatic control of lamps and fans.

IOT Based Home Automation And security System through Voice call

In this system user monitor and control home appliance remotely from mobile application. For security system PIR sensor installed at the near the door .If any unexpected motion sensed by PIR sensor then voice call are sent to the owner.

Proposed System
Block Diagram

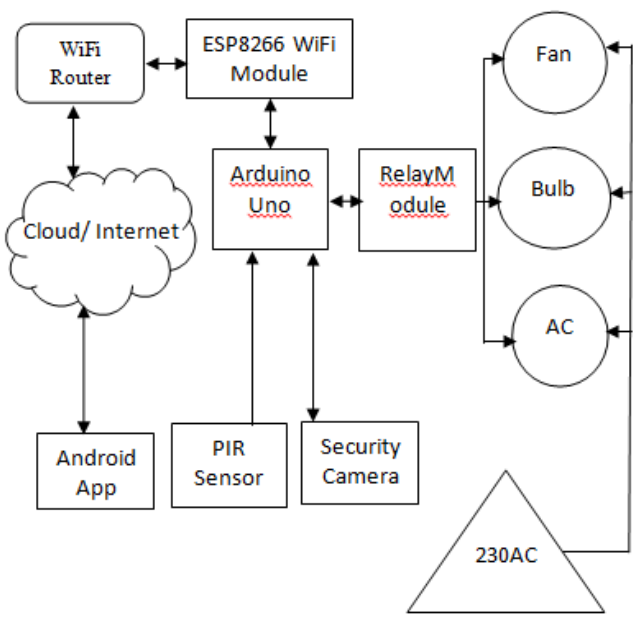

Fig 1: System Architecture

A. Components Required:

1. Arduino Uno
2. Esp-8226 Wi-Fi Module
3. PIR Motion detector Sensor
4. OV7670 Camera Module
5. Relays for connecting home appliances
6. Android Mobile

1. Arduino Uno

The Arduino Uno is microcontroller board supported by the ATmega328. It possess 14 input/output that is digital pins out of that 6 pins are used as PWM o/p &6 pins analog inputs, a 16MHZ ceramic resonator, an ICSP header , an USB connection a power jack. Arduino IDE is an open-source platform which helps to build

an electronic project. Arduino does not require a different piece of hardware (called a programmer) to load new code onto the board rather we can simply use a USB cable.

2. ESP-8226 Wi-Fi Module:
The ESP8226 Wi-Fi Module is a self-controlled SOC with unified TCP/IP protocol stack that gives any microcontroller admittance to Wi-Fi network. The ESP8226 can grownup an application or transfer a every Wi-Fi networking tasks through other application processor.

3. Relay:
Relay is nothing but an electromagnetic switch. It is functioned by somewhat little electric current which can turn on or off a much larger current. An electromagnet is an temporary magnet It is the heart of relay. Relay keeps major current of the circuit departed from the switch and twists the current straight from the battery to the circuit. Relay can allow to tie-up lights obsessed by a secondary 12-volt circuit like as high/low ignition or beams.

4. Pir Sensor:
The thermal energy emitted by human beings is around 9-10 micro-meter each day. Piezoelectric is a device which detects this wavelength when human being is in its proximity range. A simple lens is used for wide detection. Sensor can be calibrated in such a way that can ignore domestic pets by setting sensitivity threshold at higher or by ensuring that the floor of the room remains out of focus.

5. OV7670 Camera Module:
The OV7670 image sensor is an insignificant size, low voltage, single–chip VGA camera and CMOS image processor for total functions. It offers full-frame, windowed 8-bit images in different formats, well-ordered by the (SCCB) interface. The camera module is powered from single +3.3V supply of power and exterior clock source camera module clock pin. The camera module reinforced in onboard LDO regular only require single 3.3v voltage and may be used in STM32, chip kit Arduino, ARM,FPGA and etc.

OV7670 module specification:
- Resolution 640X480 VGA
- Optical size 1/6 inch
- Mounted with high quality F1.8/6mm lens
- It has High sensitivity for low light operation
- Onboard regular and 3.3v supply needed

System Design and Implementation Setup
Software Design
The Android studio and Java programming language is used for creating android app. This app has User Name and Password are provided for security purpose .After building the app it is connected to the cloud through internet connection. Then it is connected to home Wi-Fi router through IP address and router connected to the ESP8266 Wi-Fi module. Wi-Fi module will give command to Arduino based on commands received from android app. Action will be performed accordingly and status of the same will be updated in android app. The user can control all connected electrical appliances status as per the need through user login in android app.

Implementation Setup
To implement our smart home automation system and security system we have implemented experimental setup as displayed in fig. 2where we have used arduino as a main microcontroller & Relay board used for connecting electrical appliances and Arduino board. We have used ESP8266 Wi-Fi module to connect android app and other connected devices with system through router.

e ISSN 2348 –1269, Print ISSN 2349-5138
Marathwada Mitra Mandal, Pune

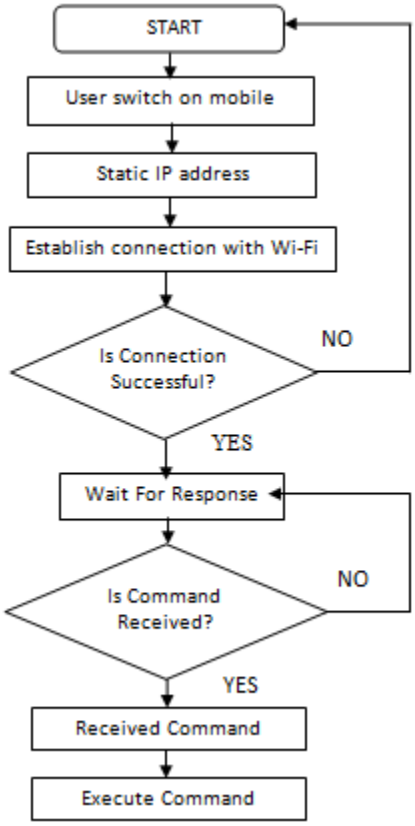

For Security purpose we have used passive infrared sensor to perceive motion and Ov7670 camera module to capture image.

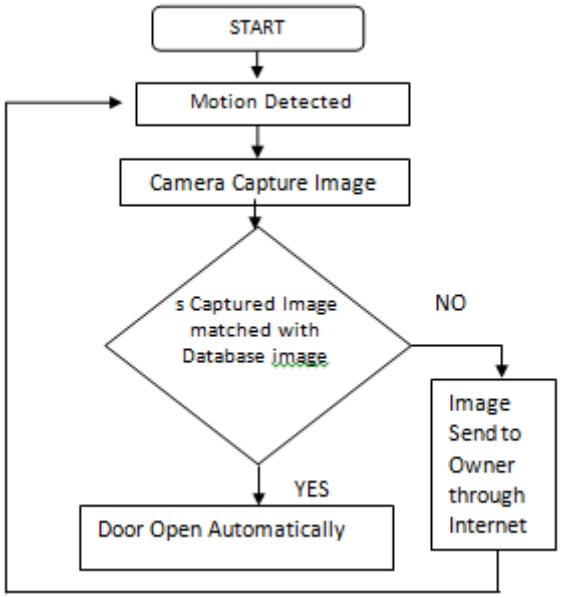

We have tested our home automation system on our experimental set up.

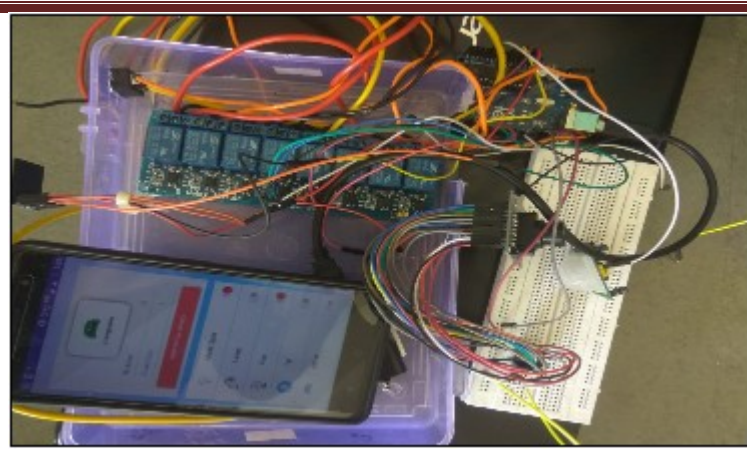

Fig. 2: Experimental Setup

RESULT

The smart IOT system we have developed will be installed on home places. User can use an Android app for controlling the home appliances. When user open android app then first page appears as login page as displayed in fig 3. As soon as the user login a home page will appear in which user could keep a track of whole electrical devices, which are associated to the server it is shown in fig. 5.
The user can alter the status of devices easily using simply touch command from anywhere in the world with a smart android phone. This module provides 100% efficiency in terms of communication and it also provides security as it has a single admin who can control all the connected devices. For security purpose we used PIR motion detection sensor and OV7670 camera module. PIR is used for motion detection of human body, whenever motion is detected then Arduino will give command to OV7670 camera module to acquire the image then captured image will compare with database image. If captured image matched with database image then door will open automatically and if not matched then it will send to the android app using Internet.

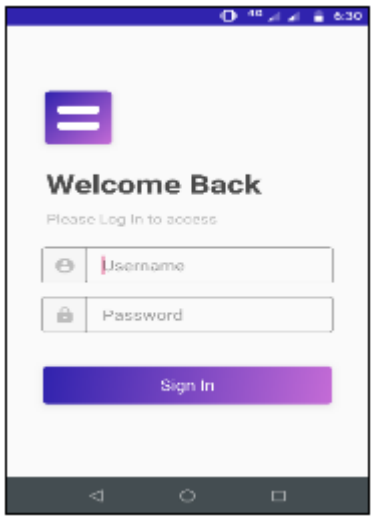

Fig. 3: Login Page

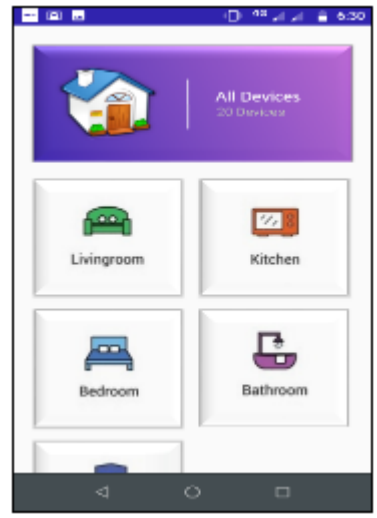

Fig. 4: Dashboard

e ISSN 2348 –1269, Print ISSN 2349-5138
Marathwada Mitra Mandal, Pune

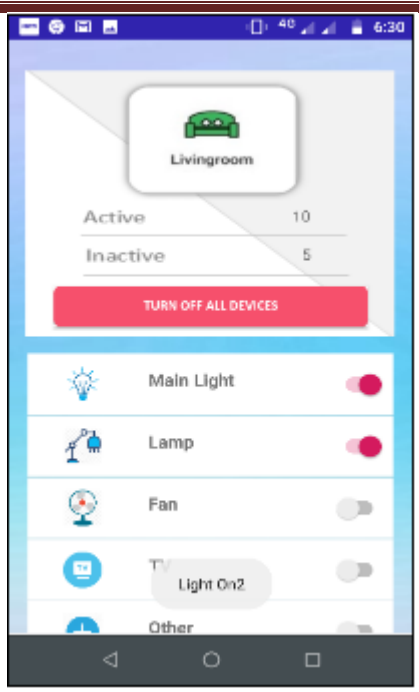

Fig. 5: Devices Status

Conclusion

The functioning of smart home automation system and security provide 100% efficiency .It uses IOT platform, this platform uses the IOT technology to create network between main server &other electrical appliances making smart home. The whole systems consist of single admin which makes our module secure one.

Future Scope

For Future work we could try to increase the number of network on a single server making a whole city automation using IOT.

References

1. J. Jeyapadmini K. R. Kashwen,*" Power utilization and conservation in smart homes using IOT",*2015 International conference on computation of power, Information &communication - 2015.
2. Mircea Muar and stein brad,*" Monitoring and controlling smart equipment using And controlling of smart equipment using Android compatible devices towards IOT applications and services an manufacturing industry"* Automation quality and testing Robotics,2014 IEEE International conference.
3. https://create.arduino.cc
4. https://www.instructable.com
5. http://electrosome.com/home-automation-arduino- esp8266
6. https://developer.android.com/tools/studio/index.html.
7. https://www.hackster.io/
8. B. R. Pavithra, D., "Iot based monitoring and control system for home automation," pp. 169 173, April 2015.
9. B. S. S. Tharaniya soundhari, M., "*Intelligent interface based speech recognition for home automation using android application,"* pp. 1 –11, march 2015

IOT based LPG Cylinder Monitoring and Booking System

Priyanka Shinde, Snehal Kamble, Viraj Tamhane & Prof. Anup Dakre
Marathwada Mitra Mandal's College of Engineering, (E & TC)
Pune. India

ABSTRACT: *Home Fires have caused significant damage in lives and property lately. LPG is astoundingly inflammable and can devour even at some division from the wellspring of spillage. Most flame setbacks are caused by virtue of a low quality versatile cylinder or when the controller isn't murdered. The supply of gas from the controller to the burner is on even after the controller is killed. Inadvertently, if the handle is turned on realizes the gas spills. This endeavor deals with the acknowledgment, checking and control game plan of LPG spillage. The gas sensor MQ-5 is very delicate to methane and propane which are major constituents of LPG. A pile cell is used to evaluate the largeness of chamber observably. The greatness of barrel is appeared and some 4-5 MQ-5 sensors will be placed in better spot of room, yield of sensor will end up being high when there is LPG spillage is accessible. Right when the sensor yield is high flag will be traded on. Using exchange DC motor the stove handle is thus controlled. Close by safety efforts the system has additional favored viewpoint of customized re-booking of barrel when the dimension of gas goes underneath the normal load of chamber.*

Keywords: *gas leakage, gas sensor, smoke detector, NODE MCU*

1. Introduction

The quantity of passing because of the blast of gas chambers has been expanding as of late. The explanation behind such blast is because of inadequate barrels, old valves, destroyed controllers and absence of mindfulness utilizing gas chambers add to the dangers. The significant restriction of leading polymers, which are utilized in past framework, is the absence of solidness particularly when exposed to high temperatures above 300C. These reason them to initially frame cross connections between the different polymer chains and later break down seriously restricting their capacity to work as a gas sensor. The quantity of passings because of the blast of gas chambers has been expanding as of late. The explanation behind such blast is because of unacceptable barrels, old valves, destroyed controllers and absence of mindfulness utilizing gas chambers add to the dangers. The significant confinement of directing polymers, which are utilized in past framework, is the absence of soundness particularly when exposed to high temperatures above 300C. These reason them to initially frame cross connections between the different polymer chains and later break down seriously restricting their capacity to work as a gas sensor. Home Fires have caused significant damage in lives and property lately. LPG is especially inflammable and can expend even at some partition from the wellspring of spillage. Most flame incidents are caused by virtue of a low quality versatile cylinder or when the controller isn't slaughtered. The supply of gas from the controller to the burner is on even after the controller is killed. Accidentally, if the handle is turned on achieves the gas spills. This endeavor deals with the acknowledgment, checking and control course of action of LPG spillage. The gas sensor MQ-5 is very sensitive to methane and propane which are principal constituents of LPG.

Literature Survey

This venture [1] is a viable positive method for checking the gas amount in the holder, and to private just as to put in a refill request in the individual branch office(gas organization), by means of a message by methods for web through IoT module. The nonstop measure is finished utilizing the heap cell which assistant takes a shot at the standard of piezoelectric sensor, i.e; when a gas holder is put on the heap cell it gauges the weight and sends an electric heartbeat to the processing board which will contrast the beat and a perfect an incentive in type of computerized (the electric heartbeat is changed over in to identical advanced esteem). In the event that the looked at yield is high, at that point it sends a pulse(high) to the IoT which will refresh it to the web yet doesn't submit a request, yet on the off chance that the thought about yield is low, at that point it send a pulse(low) to the IoT which will refresh it to the web an even put in a gas refill request.
Wellbeing and security is most essential for anything which we have in our every day life, particularly in the home to keep the blast of gases. Presently a-days the blast of residential LPG is expanding; LPG trick is additionally expanding parallel with it. To maintain a strategic distance from the every now and again checking the gas physically and trick, the amount of gas in barrel is consistently observed utilizing a weight

sensor Load cell. When level achieves an edge value1 a message is sent to client and to office to book another chamber by sending the client name, client id. [2]

IoT is an extending system of physical gadgets that are connected with various kinds of sensors and with the assistance of network to the web; they can trade information. Through IoT, web has now stretched out its underlying foundations to pretty much every conceivable thing present around us and is not any more constrained to our PCs and cell phones. Security, the basic worry of any undertaking, has not been left immaculate by IoT. [3]

Advancement of gas sensors to screen ignitable gases is basic because of the worry for wellbeing prerequisites in homes and businesses. The melted oil gas (LPG)/NH3 is one of broadly utilized yet conceivably unsafe gases and its recognition is especially critical, in light of the fact that blast mishap might be caused when it spills out unintentionally or accidentally. The vast majority of the financially accessible sensors are comprised of metal oxides which work just at high temperature, and thus need a neighboring framework for warming, prompting higher power utilization. Henceforth need is for an utilization and toss sensor low power devouring sensor. [4]

The task portrayed in [5] centers around building up an electronic framework that distinguishes gas spillage and smoke giving visual dimension sign utilizing LEDs. If there should be an occurrence of high focus gas or smoke identified, the framework remotely actuates a hand-off to turn off the mains accordingly keeping a noteworthy probability of flame mishap and furthermore gives sound alert for the equivalent. The simple voltage esteems likeness smoke and gas fixation recognized are remotely transmitted to be shown on a PC screen occasionally. The framework is invaluable contrasted with the Existing frameworks in how it is a battery controlled, savvy independent module that does not require human intercession.

The gas sensor MQ-5 is exceptionally touchy to methane and propane which are primary constituents of LPG. A heap cell is utilized [6] to gauge the heaviness of barrel consistently. The heaviness of chamber is shown ceaselessly and some 4-5 MQ-5 sensors will be set in better place of room, yield of sensor will turn out to be high when there is LPG spillage is available. At the point when temperature surpass above limit then naturally signal will on and exhaust fan will consequently on. At the point when the heaviness of chamber equivalent to limit esteem, message will appear on android application that the barrel is going to discharge now.

The target of proposition exhibited in [7] is to change over this manual utilization into mechanization. As per creators thought LPG utilization in apparatuses in which, when will in general hole or any flame mishaps win to happen there is a signal which naturally turns on which alert the client, increasingly over the controller of the gas will kill consequently so the spillage of gas can be cut-shorted first and foremost stage itself . The Alert message will likewise sent to enrolled client number they have worked upon another particular to facilitate our way to locate the exact estimation of measure of LPG left when it's utilized day by day with the goal that we can have leftover portion to book before it's absolutely finished. The rest of will naturally send to both enrolled client number and administrator number for example gas specialist.

Mr S. Nachimuthu and et al [8] bring this paper to make mindfulness about the diminishing load of the gas in the barrel, and to submit a gas request utilizing IOT. The gas booking/request is being finished with the assistance IOT and that ceaseless weight estimation is finished utilizing a heap cell which is interfaced with a NODE MCUr. With regards to security of the pack just as gas holder we have a MQ-2(gas sensor).the gas sensor recognize the spillage and the servo engine turn off the controller.

In [9], if there is any gas spillage from capacity tank, administration station or from the vehicle then a bell will turn ON and an alarm message will be sent to a pre-set versatile number by utilizing MIT app innovation. Sound from the caution just as message in the versatile number will give significant proposal to the clients so they can keep themselves from unsafe impact of LPG gas spillage. Proposed demonstrate tells alarm to individuals before any spillage from the gas chamber and furthermore consequently books for refilling of gas from the gas booking focus before the barrel gets vacant.

Darade Pooja and et al [10] dissect the framework plan in two segments one is the barrel client and second is the office side. We are utilizing the arm 7 controller which will screen the heaviness of the LPG in the wake of checking if weight is beneath fixed point it will send the message to the gas office and gas organization will send the arrival message that gas booking is finished.

Proposed System

A gas spill alludes to a hole of flammable gas or different vaporous item from a pipeline or other regulation into any zone where the gas ought not to be available. Since a little hole may steadily develop an unstable

centralization of gas, spills are exceptionally unsafe. The fig below shows the block diagram for LPG Level Monitoring, Booking and Gas Leakage Detector.

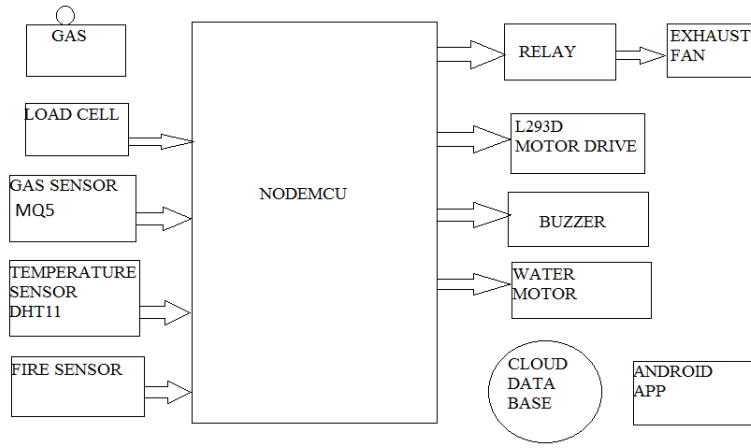

Fig. 1 Proposed Architecture

The gas sensor MQ-6 is very sensitive to methane and propane which are main constituents of LPG. A load cell is used to measure the weight of cylinder continuously. The weight of cylinder is updated on mobile app; output of sensor will become high when there is LPG leakage is present. When temperature exceed above threshold then automatically buzzer will on and exhaust fan will automatically on. When the weight of cylinder equal to threshold value, message will show on android application that the cylinder is going to empty now. Fire sensor is used to detect fire in room. Whenever LPG leakage or fire is detected a buzzer will start to buzz to alert surrounding people. Same will be updated on mobile app and a text is transmitted to user via internet. NODE MCU is interfaced to Wi-Fi module to enable wireless connection between NODE MCU and server. Detection of person by IR sensor is responsible for starting of fan.

Flow Chart

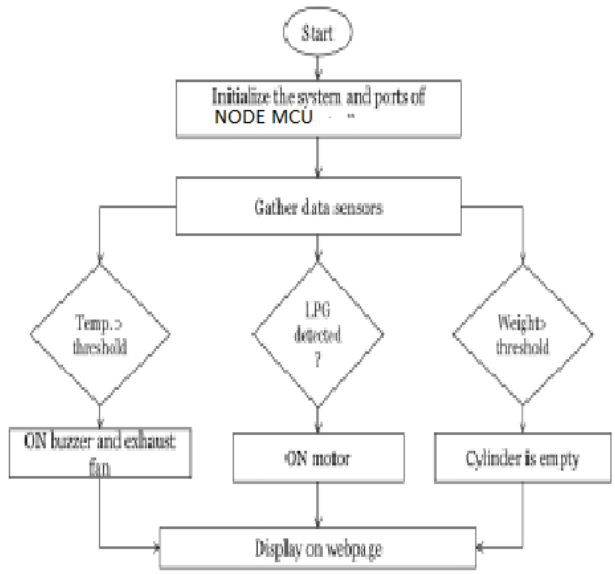

Fig. 2 Flow Chart

e ISSN 2348 –1269, Print ISSN 2349-5138
Marathwada Mitra Mandal, Pune

Algorithm

Step 1: Initialize the system.
Step 2: Gather data from all three sensors.
Step 3: Is weight greater than threshold? If no then notified cylinder's status as cylinder is empty on app.
Step 4: Is gas sensor detects LPG? If yes then notified this on app and on motor to close gas valve.
Step 5: Is temperature is greater than threshold value? If yes then ON buzzer and exhaust fan.
Step 6: Display current value of temperature and weight of cylinder on webpage.
Step 7: Stop.

Conclusion

The gas indicator framework actualized met certain great conditions, for example, minimal effort, tremendous application, plan economy, accessibility of parts (privately sourced) and explore materials, efficiency, compatibility, portability and also durability. Thus the system is very accurately defining the leakage of the system. Advantages of this system over existing system are the sensor has excellent sensitivity combined with a quick response time and it easily monitor gas leakage and surrounding temperature using sensors. The system is best suited for the application related to gas leakage detection but suffers from some drawbacks like its sensitivity depends on Humidity and temperature and it will not operate unless and until you didn't provide 5V supply to the system.

References

1. Shivalingesh B.M, Ramesh C, Mahesh S.R, Pooja R, Preethi K. Mane, Kumuda S, LPG Detection, Measurement and Booking System, IJRSI, Volume I, Issue VI, November 2014
2. Kumar Keshamoni, SabbaniHemanth, Smart Gas Level Monitoring, Booking Gas Leakage Detector over IoT, 7th International Advance Computing Conference, IEEE, 2017.
3. AsmitaVarma, Prabhakar S, KayalvizhiJayavel, Gas Leakage Detection and Smart Alerting and Prediction Using IoT, IEEE, 2017
4. Anandhakrishnan S, Deepesh Nair, Rakesh K, SampathK,Gayathri S Nair, IOT Based Smart Gas Monitoring System, IOSR Journal of Electrical and Electronics Engineering (IOSR-JEEE), PP 82-87, 2017.
5. Arun Raj, Athira Viswanathan, LPG Gas Monitoring System, (IJITR) International Journal Of Innovative Technology And Research, Volume No.3, Issue No.2, 2015

IOT based Surveillance Bot to Improve Security

Shubham Bartakke, Tejal Deshpande, Vikram Awate, Prof. S. J. Koparde
MMCOE College, Maharashtra, India

ABSTRACT: *There are several surveillance systems such as camera, CCTV etc. In such type of systems, the person who is nearby located in particular area can only see what is happening in that place . Our proposed systemis made for real-time live streaming and monitoring by using Raspberry Pi with inbuilt Wi-Fi connectivity. Whereas we can monitor the movements in 360 degrees which is accomplished by using L type DC motors. Also we are going to detect gas leakage. By using video cameras, information returned by ROBOT analyzed the real time images so that thecomputation effort, cost and a resource requirements needed are significantly decreased.*

Keywords: *Home Security, Raspberry Pi, Home Automation*

1. Introduction

Robots are becoming more advanced with technology.

The system mainobjective is to built a device that can becontrolled by the control instructions withmany integrated features.It is preferred for security cameras and isthe main part of home automation. Raspberry pi functions almost as a computer and has small size. Privacy and security are the main advantages of such type of systems. The other major advantage is that it is a simple circuit .The operating system used here is Raspbian OS. Frequently check and extremely harmful parameter is Gas Leakage.So, proposed system capable to monitoring this value indefinitely without any delay and without putting any harm's way. Our propose system is interface with gas sensor on Raspberry Pi and it has live video streaming. User can control the mobile video surveillance systems by using wire or wireless systems. The system is divided mainly as Raspberry Pi and Process Unit and is link together with wireless network. Raspberry Pi Unit will receive the readings from Sensor Unit and will upload to the server.

Raspberry Pi camera is interface with CSI port of Raspberry Pi.This system uses pi camera to detect obstacle in the surveillance area and by using live streamer can send captured data to authorized person.As we are using a bot to continuously move in thehome ,when it detects gas leakage it will send anotification alert to authorized person, so one can takea action.

Fig -1: Raspberry Pi 3 Model B

2. Literature Survey

In recent years, lots of research have been done in computer vision domain. Video surveillance in real-time scenario, especially for humans, live tracking and behavior analysis is one of the most active research topics in computer vision and artificial intelligence in present situation. For home application is to provide low cost efficient video surveillance system and can be use in application such as server room monitoring ,elevator. The existing systems requires huge storage capacity and consumes lots of bandwidth and this problems needs to be solved ..

2.1 Existing System

MQ 6 gas sensor detects the gas leakage.signal is received by microcontoller from sensor and external devices needs active signal which is generated by microcontroller. Philips microcontroller increase efficiency and memory . GAS leakage detection is use for preventing crimes and fire and night vision capability with low cost is its advantage. It provides security at night time.MPJEG streamer and server client model using java Raspberry Pi robot is supported by server client model. This entire model is connected to a local network and anyone available in that particular local network can control it from anywhere. The live streaming is done by MPJEG streamer.

1. Gas Sensor

Gas sensor detects the gases in particular area for security purpose and if detected the process can automatically shut down MQ 6 detect gas concentration from 2000 to 10000 ppm

b) Limit Switch

Limit switch contains actuator and is operated by connecting and splitting electrical connections.

2. Proposed System

Limit switch contains actuator and is operated by connecting and splitting electrical connections this system helps to built a real time YouTube live streaming and monitoring system by using Raspberry with inbuilt Wi-Fi connectivity.

pi records the video of area in real time commands are given to computer using Raspberry pi to capture video. according to commands the Wi-Fi bot works. Pi camera gives best quality of picture in video interface of the motor driver to Raspberry pi is done using GPIO of Raspberry

Raspberry Pi boot up ,Once the connections of GPIO ,motor shield ,driver ,charger of 2Amp current are connected properly for controlling the motors python program is used

remote movements are controlled by input commands present on webpage made using html and URL. Communication done through Raspberry pi modle3b

camera is interfaced in its port and is enable in Raspberry pi settings installation and configuration of MJPEG streamer is done for live streaming of videos. As all configuration is completed,Live streaming can be viewed on app and website. Here admin have all rights of privacy

3 Method

We are using Raspberry Pi B+ model for observing device operations such as gas leakage , video capture. We create IP address for vide live streaming. By using Raspbian OS Raspberry Pi is booted. Then for live streaming we opened an account in YouTube and with the help of the feature of live streaming in it, we can live stream videos using the link provided by the window. We have also made a app for user convenience

4 Hardware and Software Requirement

i) Hardware:

1. Raspberry Pi

A small sized microcontroller capable of performing various functions as in surveillance system, military applications.

B) Raspberry Pi Camera

It consist of 5 MP camera . It can take 1080 p , 780p and also still pictures. Raspberry Pi has own camera slot available on board for R-Pi camera. So camera is directly plugs through that slot. It can be done as follows:

Fig-Camera interfacing

C) Gas Sensor (MQ6):
Sensitive for LPG, Propane,hydrogen. Low cost.
Fast response and recovery.
Adjustable sensitivity. Signal output indicator.
Low cost. Fast response and recovery. Adjustable sensitivity. Signal output indicator.

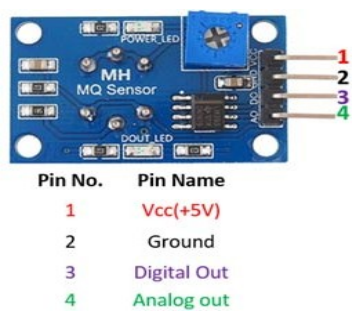

Fig-Pin diagram for MQ6

D) SD Card
Raspberry PI has no storage on board.SD/Micro SD card stores the OS. 8Gb is the total memory of SD card and Class 10 has the high speed.

E) Additional Connectivity: (Internet)
This may be an Ethernet/LAN cable standard RJ45 connector or a USB Wi-Fi adaptor.

ii)Software:
A] Operating system:
RaspberryPi requires Windows for installing on a Windows/Computers. Its easy to operate and display of home page.

B] VNC Viewer
RealVNC is a company that provides remote access software. VNC needs server and client application Windows remote desktop connection can be used instead of VNC Viewer.

C] TWILIO
Twilio is a cloud communications platform. Twilio allows software developers to programmatically make and receive phone calls and send and receive text messages using its web serviceAPIs.

D] FIREBASE
Fire base is web app development .It user plethora tools and services which develop high quality apps.

e ISSN 2348 –1269, Print ISSN 2349-5138
Marathwada Mitra Mandal, Pune

E] Raspbian :

It has pre installed software which more than 35000 packages in good format and is easy for free installation

4.1 Design and System Architecture

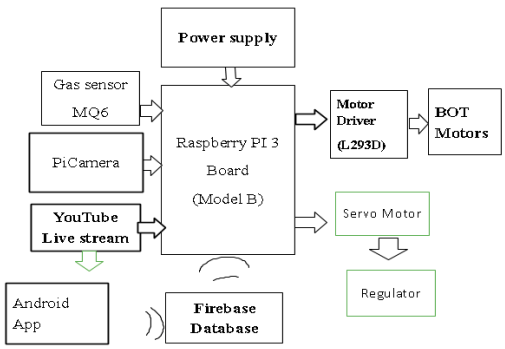

Fig -2: Block Diagram of the IOT Based Surveillance Bot to Improve Security

The smart supervisor system is developed in this study of next generation smart supervisor using ARM cortex A53. They are observing device operation such as gas leakage detection, temperature & video capture. All the devices are placed on the robot. The camera is placed on the front side of the robot for streaming the video.We are using here android app to change the direction of robot from anywhere as well as to monitor the live stream. For that we will require the internet connection to both the Raspberry pi and mobile. Through the app we will change the firebase database, which is continuously monitoring by the Raspberry pi. According to the database the robot will change its direction. The Pi camera is used to capture the live video. For access the video we are using the You Tube live stream. The YouTube live stream is accessing through the app to monitor the video.The Raspberry pi and all the devices are mounted on the robot. The camera is placed to the front side of the robot to capture the video. We are using here android app to change the direction of robot from anywhere as well as to monitor the live stream. For that we will require the internet connection to both the Raspberry pi and mobile.

Through the app we will change the firebase database, which is continuously monitoring by the Raspberry pi. According to the database the robot will change its direction. The pi camera is used to capture the live video. For access thevideo we are using the You Tube live stream. The You-tube live stream is accessing through the app to monitor the video.

4.2 Abbreviations and Acronyms

MIPI- Mobile Industry Processor Interface
CSI- Camera Serial Interface
OpenCV- Open Source Computer Vision
MJPEG- Motion JPEG
BCM- Broadcom
HDMI- High Definition Multimedia Interface
DSI- Display Serial Interface

4.3 Flow-Chart

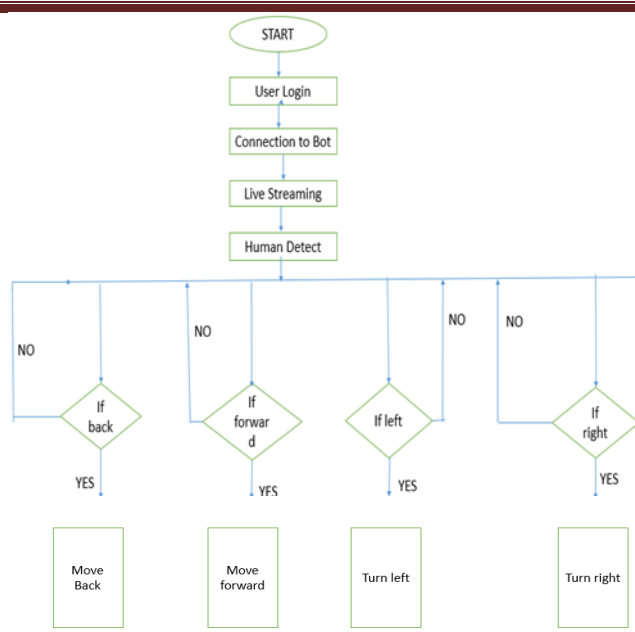

Fig -3: Flow Chart.

Result and Analysis

The project design and implemented on Raspberry Pi .The aspect of the system are gas leakage detection,obstacle avoidance , live streaming using Pi camera and send out alert message to user and Fire Brigade Station as well as the Gas pipe notch will be turn off .It did not achieve the option of image processing in Raspberry Pi because system constraints that is processor speed

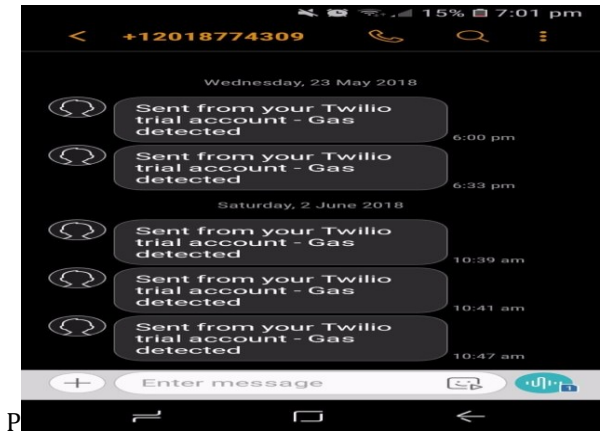

Fig -4 When gas leakage is detected , SMS is sent from Twilio app to user

Conclusions

The smart supervisor system we have built surveillance and real time video streaming system in which authentication is required to access the smart supervisor system. The smart supervisor system displaying the gas sensor value. This message is based on the response received from the smart supervisor system server & Smart phone. Whenever the gas leakage is detected, a notification is going to be sent to the registered mobile number. If correct IP address is provided, the app will proceed to display the different device operations & video streaming operations. According to the instructions provided by the app on our android mobile we can operate the movement of the robot. The robot can move in forward, backward, left and right direction.

e ISSN 2348 –1269, Print ISSN 2349-5138
Marathwada Mitra Mandal, Pune

Future Scope

Future work that can be implemented in this project is, we can extend the single camera inspection into multi line camera inspection thereby increasing the accuracy. We can implement this in other fields by changing simple software and hardware. It can be implemented in quality control of products before final dispatch. Also it can be used in gas industries and CNG pumps and avoid the danger having explosion.

1. Major improvements on the system processor speed are much needed in order to process large files e.g. video for effective motion detection and tracking.
2. The designed security system can be used in homes to monitor the facility at any given time.
3. The system requires to be remotely controlled. Hence, future explorations should focus much more on the same.

References

1. GSM Based Gas Leakage Detection System Ashish Shrivastava, RatneshPrabhaker, Rajeev Kumar and Rahul Verma
2. Raspberry Pi Based Obstacle Avoiding Robot Amruta Nikam[1], Akshata Doddamani[2], Divya Deshpande, Shrinivas Manjramkar[4]
3. Raspberry PI Based Security System PRJ Index 156 By: Singoee Sylvestre Sheshai
4. Vision based -Real time monitoring security system for smart home . By Khushbu H. Mehta ,Niti P. Gupta. Vol. 4 ,2nd February 2016.

Image Processing Based Automatic Painting Robot using Raspberry Pi

Vishal Nevase, Yash Pandya, Harshali Shaha, Prof. Anagha Kunte
Department of E & TC,
Marathwada Mitra Mandal's College of Engineering,
Pune, India

ABSTRACT: *In today's world, there is a requirement of quickness in jobs, machine-handling things that cannot be handled more accurately by humans. It is very much true and a much know fact that once a machine is efficient enough, it can perform any task assigned to it perform that with heightened accuracy. One such job includes applying paints over newly furnished walls, car parts and over a variety of plane surfaces. There are many painting machines based on sensing parameters and time, but problems arrive when the parameters of external environment change, where the paint is to be applied. For this matter to be solved, we aim at our project to solve the problem using digital image processing and color recognition. The idea is to capture the image of the wall where there is a leftover area to be painted and to paint the area. Similarly, as per the changes in car parts differ, each one can be scanned and the paint will be applied only on the area to be painted. The major advantage of this project is that the accuracy and flexibility of the painting machine, regarding different work environments, heightens gradually with the up gradation and integration of this project over different work environments.*

Keywords: *Digital Image Processing, Robotics, Automatic Control, Raspberry PI Processor, PI Camera, IR Sensor and Spray Painting Gun.*

1. Introduction

Automatic painting is feasible for various finishing task and applying designs over car parts. In the various industries, construction sites different painting machines or robots and techniques are used for painting external and internal walls. These concepts are further modified and used modified and used as which can be further integrated to form an image scanning and tattooing robot.

In this project, the robot that has electronic components and they are used in recognizing the white portion of walls which haven't been painted or have been left for design painting and will apply paint in only those areas. The software part involves application of the algorithm, briefly including the image recognition [7][8] to recognize and learn about the white portions on the walls to be painted, on car parts such as bonnets, doors of the cars along with different other metal body parts of cars and then a variety of other products and then applying the painting actuation. The mechanical design will consist of a robot arm [9][10], which will move vertically with a spray painting actuation, big enough to cover an area of approximately 4*2 feet for painting. The forward & backward movement of the robot covers the X-axis of the painting, whereas the up & down motion of the arm covers the Y-Axis of the painting.

II. Literature Survey

Airbrush Robotic Painting System focuses on building a painting robot for analyzing the colorful or graphical characteristics of the object before it [1]. The application of this robot is aimed towards artistic purposes as well as graphical goals. For the robot to acquire graphical aspects, it is provided with a mathematical formula for painting design, which is a radially symmetric Gaussian distribution function. This model validates the color spraying intensity of the single spraying brush through the parameters like airflow through the spray, the paint application duration over a specific part, the hue and saturation of the color over a period. Mechanical parts of the painting machine include a single airbrush nozzle along with a robotic arm.

Automatic Robotic Spray Painting of Low Volume High Variant Parts, Flex Paint approach use by this project [6], i.e. it uses detection of faults or anomalies on a surface area by analyzing the surface's irregularities, faults or cavities, and then applies the paint on the surfaces as well as the depths or faults of the surfaces. The detection of faults on the surfaces is done by LASER application and detection of the LASER light by a camera over the surface area. This gives the Microcomputer entire 3D model of the object area to be painted. The algorithm of this project also uses the function of Feature-Finding, to find and extract the geometrical features of the to-be-painted area.

e ISSN 2348 –1269, Print ISSN 2349-5138
Marathwada Mitra Mandal, Pune

Trajectory optimization of Electrostatic spray Painting Robots on Curved Surface (September '17): This device uses a high voltage electrostatic field in the betterment of painting over surfaces. The device is globally used for coating variety of car parts. This device enhances painting trajectory with two concepts, which are path planning and optimizing the speed of painting spray. This concept has brought a gradual upgradation in painting technologies, thus it is being applied and researched on even more. If this technology is compared to air spraying, it is three times better than the latter regarding the usage efficiency of the paint. Its implementation for initials include math, control of machines in terms of mechatronics as well as fluid mechanics.

Brushstroke Rendering Algorithm for a Painting Robot (September '17): The very basic approach of the project is to create a non-photorealistic picture without it being printed or painted with a spray gun, rather being painted artistically, just like making the machine act like a human artist with the help of brush strokes being painted by scanning and applying algorithms over how a brush stroke should be applied. The robot, named ARTCYBE, decides the brush stroke's width, which should not be very larger or lesser than normal, to create optimal strokes. The robot is also developed to mix colors in an arbitrary fashion to form another color and at the same time, it watches the consumption of colors to prevent loss of colors just to form an extra quantity of the mixed color.

A detailed Robot Design for Interior Wall Painting is depicted in Robo painter application [2]. Modern technologies in painting require machines or robots which can paint walls by also moving from one place to another and can work without human assistance. In this project, a robot, named "TAMIR" is designed for the same purpose, which is wall painting. The robot consists of a total number of 8 Degrees of Freedom, out of which 6 Degrees of Freedom are used for painting arm, consisting of 3 conjoined arms, and the rest of the Two Degrees of Freedom are of the forward and backward motion of the robot. On the uppermost hand of "TAMIR", a wide-spreading spray nozzle, which covers a large amount of area horizontally, turns out to be a small one, but a helpful and time saving aspect of the device.

III. Model of Automatic Painting Robot

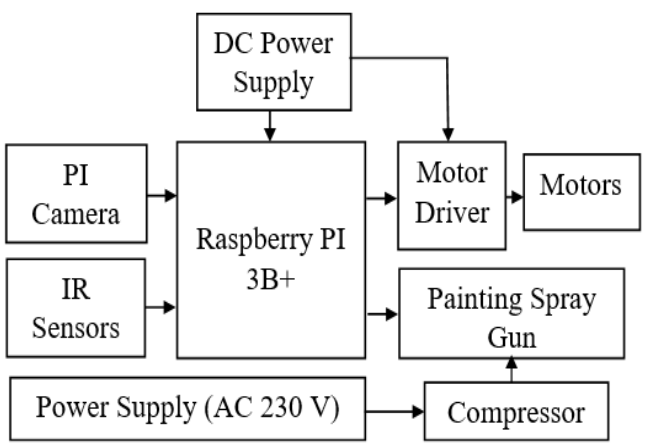

Fig. 1: Block Diagram of Automatic

Painting Robot

Operation

The figure no. 1 shows basic working block diagram of automatic painting robot. Basically the robot works on one condition i.e. it requires white surface before starting to paint on the wall or any other parts and Paint in only X-Y axis direction. PI camera which mounted on the bot will firstly captures the image which is in rectangular block from the wall that comes under its particular resolution. After capturing, verifying and processing image[8][9][13][14] of the white portion of the surface, the processor gives the instruction to start the painting. The robot will start paint in Y-axis or vertical direction that means column wise. Depending upon the distance from the wall or part, width of spray differs. Vertical action of painting which includes up and down motion of the spray gun. After completing one vertical action the robot simply move ahead i.e. in X-direction for the next columnwise painting action. For the robot to stay on one path with the

same proximity from the wall throughout the whole application of paint, the robot is equipped with IR sensors. For the IR to work, the user needs to apply a black line with the same distance from the wall or the surface. The two IR sensors, equipped by the robot, will detect the black line, where the black line will stay in the middle of the two IR sensors. The concept is known as "Line Following".

Hardware and Softwares used

This whole operation requires powerful processor and circuitry. The Fig. 2 shows the design of the robot[9][10] in which processing unit consists Raspberry PI 3b+ processor, L293D Motor driver, LED which indicates an error, 12V battery Power Supply, 30 RPM DC motors and PI camera of 5 megapixel. For painting, compressor needs 230V AC supply. Table no. 1 shows the reasons behind why to choose Raspberry PI. The configuration and interfacing of Raspberry PI[11] & PI Camera[15] is very easy. The fig. 3 shows the overall working flow of the robot.

Design of power supply and motor drivers is done by using Eagle and Proteus and programming is covered by python 2.7.16, Open CV and Java.

Table 1: Comparison between Raspberry PI and Arduino

Raspberry PI	Arduino
1. It is a mini computer with Raspbian OS which can runs multiple operations at time.	1. It is a microcontroller which can run one program again and again.
2. By using Ethernet port and USB Wi-Fi dongles Raspberry Pi can be easily connected to the internet.	2. Arduino requires external hardware to connect to the internet.
3. Language is python but C, C++, Python, ruby are pre-installed.	3. Arduino uses Arduino, C/C++.
4. Raspberry Pi does not have storage on board. It provides an SD card port.	4. Arduino can provide onboard storage.
5. This should be properly shutdown otherwise there is a risk of files corruption and software problems.	5. This is a just plug and play device. If power is connected, it starts running the program and if disconnected it simply stops.

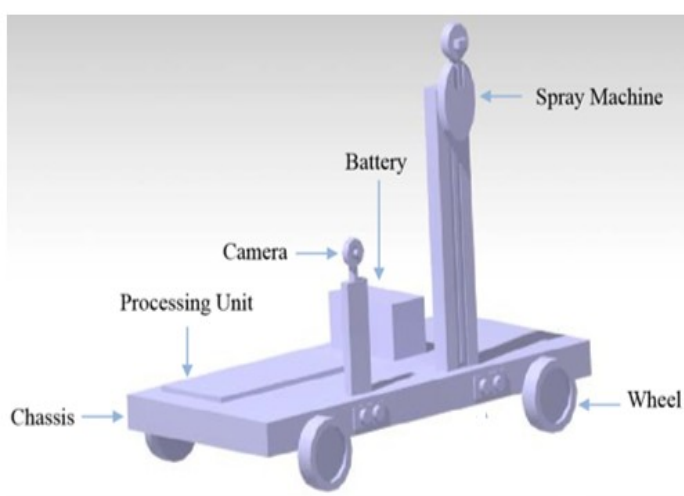

Fig. 2: Mechanical Design of Robot

e ISSN 2348 –1269, Print ISSN 2349-5138
Marathwada Mitra Mandal, Pune

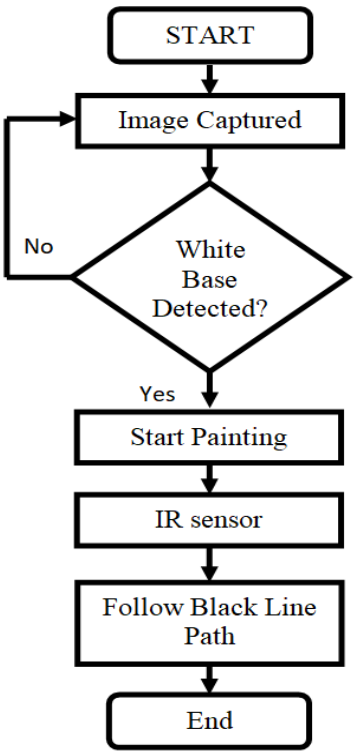

Fig. 3: Flowchart

IV. Advantages

1. Less human labour required, saves time.
2. Image processing based painting is an upgrade to all the previous kinds of painting mechanisms used in industries.

V. Future Scope

The robot can be further upgraded into smart automatic painting robot by using artificial intelligence and machine learning to detect the various shapes from the provided images and paint that particular detected shape.

VI. Conclusion

The automatic painting robot is designed and worked on using multiple sources of articles. It is now safe to say that the robot can be used under multiple applications with a variety of its features like wall or line following, white image scanning and applying different shades of paint over walls and products, according to the users' requirements and the scanned image properties

Fig.4: Automatic Painting Robot

VII. References

1. Lorenza Scalera, Paolo Gallina, Enrico Mazzon, "Airbrush Robotic Painting System: Experimental Validation of a color spray model", Research Gate, Conference Paper, June-2018.
2. Mohamed Sorour, University of Lincoin, "RoboPainter- A detailed robot design for Interior Wall Painting", Research Gate, Conference Paper,July-2015.
3. Mohamed T. Sorour, Mohamed A. Abdullatif, Ahmed A. Ramadan, and Ahmed A. AboIsmail, "Development of Roller-Based Interior Wall Painting Robot", World Academy of Science, Engineering and Technology Vol. 59, 2011.
4. S. M. S. Elattar, "Automation and Robotics in Construction: Opportunities and challenges", Emirates journal for engineering research, Vol no 13 (2), Page no 21-26 2008.
5. Naticchia, A. Giretti, A. Carbonari, "Set up of a Robotized system for interior wall painting", Proceedings of the 23rd ISARC, October 3-5, Tokyo, Japan, 2006.
6. Markus Vincze, Andreas Pichler, Ole Madsen, Morten Kristiansen, "Automatic Robotic Spray Painting of Low Volume High Variant Parts", Proceedings of the 33rd ISR (International Symposium on Robotics) October 7 – 11, 2002.
7. Gonzalez and Woods, "Digital Image Processing", Pearson Education, 3rd Edition.
8. A. K. Jain, "Fundamentals of Digital Image Processing", Prentice Hall of India, 1989.
9. Robert J. Schilling, "Fundamentals of Robotics- Analysis and Control", Prentice Hall of India.

e ISSN 2348 –1269, Print ISSN 2349-5138
Marathwada Mitra Mandal, Pune

10. "Robotics Technology and Flexible Automation" By S. R. Deb, Tata McGraw Hill.
11. https://www.raspberrypi.org/documentation
12. https://www.python.org
13. https://opencv-python-tutroals.readthedocs.in/en/latest/py_tutorials/py_imgproc/py_table_of_contents_imgproc/
14. https://www.python-course.eu/python_image_processing.php
15. https://www.raspberrypi.org/products/camera-module-v2/

Automated Arm for Harvesting Tomato in Greenhouse

Neha Kulkarni, Rishikesh Ramdasi, Vishakha Phirke, Prof Shubhangi Joshi
Marathwada Mitra Mandal's College of Engineering,
Pune. India

ABSTRACT: *A robotic ARM to detect ripe tomatoes and pick automatically is put forward in this paper. A 6 degree of freedom ARM with camera placed on the ARM will capture real time images by using image processing and a mobile plank which can freely move in the greenhouse environment. The operational flow is as follows. The camera will search for ripe tomatoes by scanning each plant in the greenhouse. After the detected object is matched with detection objectives like color, shape and value .The processor will act on the received information and will give signal one signal to ARM and other to the locomotion. The Robotic ARM moves to the corresponding position of the tomato. Finally, the gripper will pick the tomato and place it in the basket mounted on the chassis.*

Keywords: *6 Degree of Freedom, Mobile platform, Greenhouse environment, Raspi, Arduino, Greenhouse, Agri-Tech, Human-robot interface, Image detection, Object detection, Locomotion, Arm , Grippers, Containers, Coordinates, Camera, IOT, Mechatronics.*

1. Introduction

N any agriculture process, the most important and tiresome task is harvesting. Tomato trees are tall and thus requires skilled labors for precisely plucking the ripe tomato and harvesting has to be done in a certain time period where the farmer has to decide the best quality of the tomato and has to carry out harvesting task in a certain period of time. Now there is a shortage of human labor and this will keep growing in the nearing time period, this is a threat to the agricultural industry and many automated devices which can perform various tasks in agriculture are being designed every day.

In many Agri-Tech systems, the human eye is a key factor in sorting and inspection of all kinds of objects. The vision can be more prone to neglect small error and defect. Thus the processor which are trained in a manner to learn and improvise from the environment around could be more efficient and can have better control over product identification.

The FFRobotics presents a patented Robotic Fruit Harvester-The FFRobot [10]. It comprises of advance algorithms for fruit identification and classification as per the grower's preset criteria for harvesting solution. Can perform image processing which is well efficient in detecting disfigure, diseased or unripe fruits. Also, a High-Tech hand end which can precisely grasp different shape and size of the fruit.

Another Dual-Arm Agri-Tech robot for harvesting tomato in the greenhouse is developed by 'National High-tech Research and Development of China' [1].

It is a human-robot collaboration which consists of a 3 degree of freedom Arm with two end effectors. This two end effectors provide an extra grip over the tomato.

Automated harvesting devices comprise of various sensors and image processing techniques, along with a mobile platform which has a six degrees of freedom Arm mounted on top with a gripper to perform gripping and placing operation.

The platform has four wheels which operate on DC motor and thus made a mobile platform. The Arm has a camera mounted on top which can detect the object and capture real-time images and by processing that image input the Arms can platform's action is decided respectively.

II. Literature Survey

A basic requirement for object detection is image processing and a robust environment which can support the processing without any saturation. Many devices are introduced in Agricultural Technology which provides an interface between human and automation. This interface reduces the labor cost and minimizes the harvesting cost. For detection in the Greenhouse or outdoor environment, the detection mechanism must be extremely robust and precise.

Dual-arm robot delineation and testing were implemented for harvesting tomatoes in the greenhouse environment. This was reported as a prototype under the grant of the National High-Tech Research &Development Program of China [1]. They designed a harvesting Arm supported in an unstructured environment. A human-robot collaboration of 3 DOF manipulator and two end-effectors to improve

e ISSN 2348 –1269, Print ISSN 2349-5138
Marathwada Mitra Mandal, Pune

harvesting efficiency. The use of Ether CAT bus for motion control and data communication. Also, a graphic user interface is provided to indicate the state information of the robot.
The FF Robotics is a platform which produces robotic fruit harvesters [10]. It has a device which works on similar condition is the FFRobot. It provides a platform for farmers and workers to design a harvesting robot which can meet their idle harvesting conditions and can collect data and analysis of workspace of fruit picked per tree, acre and orchard.
Various techniques are used to improvise the Agricultural Technology domain. Their use can increase production and can reduce harvesting and labor cost compared to the harvesting done manually.

III. Proposed System

A. Abbreviations

DC: Direct Current, Raspi: Raspberrypi,
R&D: Research and Development,
Ether CAT: Ethernet for ControlAutomation Technology,
Agri-Tech: Agricultural Technology
RPM: Rotations per minute
DOF: Degree of Freedom
IOT: Internet of Things

B. Algorithm

1. Initial state and preset position determined by Arduino
2. Raspberrypi acquires coordinates
3. Chassis locomotion and line following
4. Align camera in front of object
5. Inverse kinematics computed on Raspberrypi
6. Provide servo angles to Arduino
7. Perform gripping action
8. Place object in container

C. Block Diagram

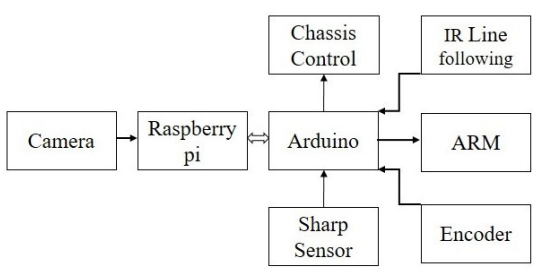

D. Working

The Arduino commands the actuators (Servos, DC motors) to take the rest position (certain predefined positions before actual operations start).
The Arduino then commands the raspberry pi to take a frame and analyze the position of the object if available. The Raspi, in turn, takes the coordinates from the object detected and forwards them to the Arduino.
Then Arduino aligns the camera and arm to directly face the object and the distance sensor (sharp sensor) is used to sense how far the object is from the arm.
The distance acquired is used to further compute the distance the chassis has to travel using simple Pythagoras theorem.
The Arduino further instructs the bot to travel the desired distance, the distance traveled is monitored using an IR based encoder installed on a wheel of the bot. Also, the motion is controlled by the IR based line following setup so that the bot doesn't traverse haywire.

Once the bot travels the desired distance, again the Arduino instructs the Raspi to sense the object position and evaluate the coordinates. The Arduino the realigns the camera and arm to face directly towards the object and again the perfect coordinates are evaluated.

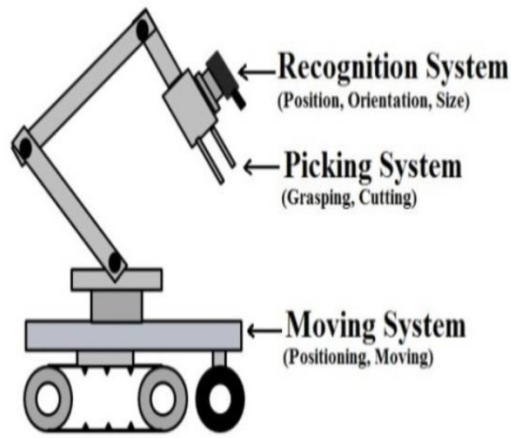

Fig1: Basic framework of an Agri-Tech Harvesting Robot.

These coordinates are used to compute the inverse kinematics and obtain the servo angles which are fed to Arduino and the arm position is changed accordingly.
Once the object is gripped, it is picked up and placed into the container for further process.

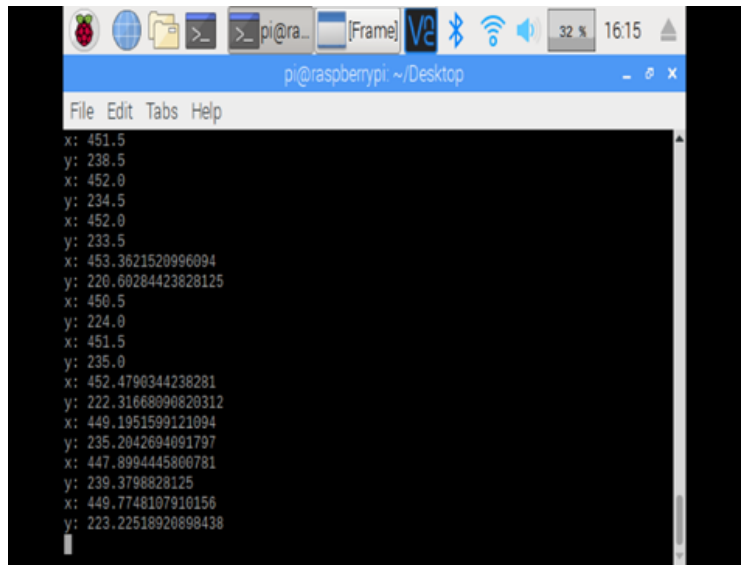

Fig2. Calculation of 'x' and 'y' coordinates, observed through Raspberrypi outputs.

e ISSN 2348 –1269, Print ISSN 2349-5138
Marathwada Mitra Mandal, Pune

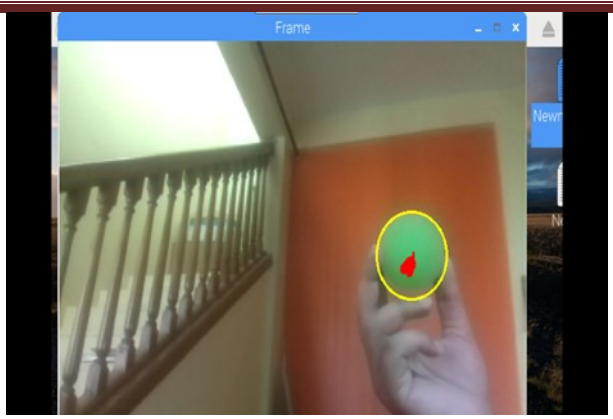

Fig 3. Detection of object by camera and calculation of xy coordinates, displaying the processed image

Fig4: Robotic Arm implementation with six servos.

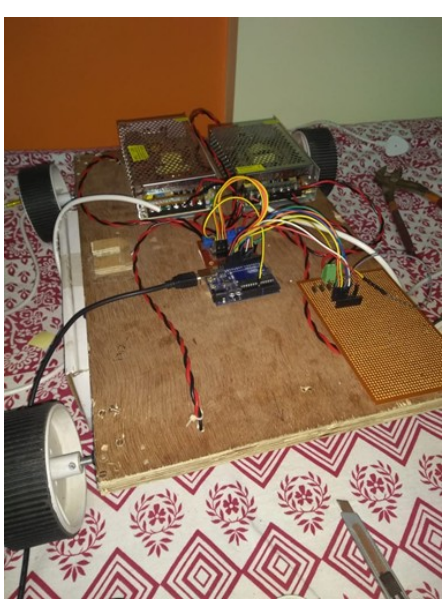

Fig5: Implementation of the locomotion.

E. Software and Hardware Implementation:

a) Controller :
   i. Arduino: Arduino UNO controller. Arduino IDE platform is used for processing the controller. Locomotion handling is carried out.
   ii. Raspberrypi: Raspi 3B controller
   The object detection mechanism with the help of camera interfacing is carried out by this controller.
b) Platform: Consists of a wooden plank as platform, hasfour wheels mounted which works on DC motor. Can operate at the speed of 10 PRM. Required voltage is 12V.
c) Arm structure: The Arm has 6 DOF and consist of 6 Servo motor. Required PWM pulse of 3-5volts and voltage is 4.8-7.2V.
d) Image Detection: Raspi 3B camera module is used for capturing images and for processing the coordinates.
e) Manipulator:Servo based manipulators including the arm and gripper were used. The arm has aluminum clamps to which the servos are attached. The aluminum clamps provide robust design at the same time they are weightless.
f) Gripper: An aluminum gripper with 55mm opening was used for gripping purposes as well as for mounting the image acquiring assembly and distance sensing assembly.
g) Encoder: A shaft encoder was implemented by placing an IR sensor near the wheel with the white line marked on it. This setup is useful for measuring the distance traveled by the bot.

F. Result

In the proposed system the Image Processing for object detection was successfully implemented. The calculation of xy and z coordinates from the sharp sensor was implemented. Manual control of chassis and Arm had a successful run. The line following and assembly were executed and tested.

IV. Conclusion

In the initial stage of the implementation, the mobile platform was delineated and fabricated along with fixation of motors. The drivers required for controlling motors were designed and developed. The Arm control with image processing for object detection was developed with Raspi and camera interfacing. Two separate controllers, Arduino for the motion control and Raspi for the object detection mechanism.

V. Future Scope

Human-robot combination in the Agri-Tech has a vast scope for development. The Automated Arm can be further upgraded by introducing various mechanisms and frameworks. Improvement in the locomotion can make the mobile platform more capable of carrying a higher load. Use of more precise sensors will make the locomotion more efficient. The object detection has a major area of development in the near future. Deep learning can be introduced which could contain of Raspi Zero Wireless and Raspi Camera Module which will make the device more Agri-tech efficient.

The load capacity can be changed. By forming changes in the neighborhood of the platform in the Greenhouse direct links can be set between the Harvesting and the Packaging departments.By using different kinds of wheels or actuators, the robot can be actually made to work almost all terrains. By using high tech sensors like LiDAR, extremely accurate 3D mapping of environment can be made. By using highly efficient image sensing equipment, accuracy in detected object attributes can be achieved. The objects with defects or objects are not ready can be bifurcated as required or as is needed by the user. By providing a graphical interface, very interactive feedback and control mechanism can be implemented. If IOT is incorporated. The system can be monitored and controlled from remote establishments without the need for human intervention

References

1. Yuanshen, Zaho. Liang Gong. Chengliang Liu. Yixiang Huang., "Dual –arm Robot Design and Testing for Harvesting,"IFAC-PapersOnLine 49-16 (2016) 161–165
2. Xiang R. Ying Y B. Jiang H Y., "Development of real-time recognition and localization methods for fruits and vegetables in," Transaction of the CSAM, 2013;44(11):208-219.(in Chinese)
3. Li H. Xu L., "The development and prospect of agricultural robots in China," Acta Agriculturae Zhejiangensis 2015;27(5):865-871

e ISSN 2348 –1269, Print ISSN 2349-5138
Marathwada Mitra Mandal, Pune

4. Kondo N. Yata K. Iida M. Shiigi T. Monta M. Kurita M. Omori H., "Development of an end-effector for tomato cluster harvesting robot," Engineering in Agriculture. Environment and Food, 2010; 3(1):20-24.
5. Feng Q C. Cheng W. Zhou J J. Wang X., "Design of structured-light vision system for tomato harvesting robot," Int J Agri& Biol eng.2014; 7(2):19-26.
6. Avadhoot R.Telepatil., "Color Object Counting and Sorting Mechanism Using Image processing," International Journal of Modern Trends in Engineering and Research www.ijmter.com @IJMTER-2015, all rights Reserved 308, e-ISSN: 2349 p-ISSN: 2393-8161.
7. Rahul Kumar.,"Object Detection and Recognition for a Pick and Place Robot," Conference Paper. November 2014, Research Gate
8. E. Reber. R. L. Michell. C. J. Carter., "Oxygen absorption in the earth's atmosphere," Aerospace Corp., Los Angeles, CA, Tech. Rep. TR-0200 (4230-46)-3, Nov. 1988.
9. J. H. Davis. J. R. Cogdell., "Calibration program for the 16-foot antenna," Elect. Eng. Res. Lab., Univ. Texas, Austin, Tech. Memo. NGL-006-69-3, Nov. 15, 1987.
10. *https://www.ffrobotics.com/*
11. *https://www.raspberrypi.org/products/raspberry-pi-3-model-b-plus/*
12. https://robokits.co.in/robot-kits/robotic-arm-kit/robotic-arm-6-dof-aluminium-clamp-without-electronics-diy-kit.
13. https://store.arduino.cc/usa/arduino-uno-rev3
14. https://www.arduino.cc/documents/datasheets/H-bridge_motor_driver.PDF
15. https://www.farnell.com/datasheets/1682209.pdf
16. https://www.mathcelebrity.com/kinematic.php
17. https://en.wikipedia.org/wiki/EtherCAT
18. https://www.learnopencv.com/
19. Ambarish Goswami. Prahlad Vedekkepat., "Humanoid Robotics: A Reference", Volume 3.
20. Macro Ceccarelli. University of Cassino, Italy,"Service Robots and Robotics: Design and Application".

Automated Solar Grass Cutter With Robotic Arms

Maitreyee Shukla, Shiwanee Sonawane, Shruti Vaidya, Prof. SampadaTavse
Marathwada Mitra Mandal College Of Engineering,
Pune, India

ABSTRACT: *Our proposed system describes the different features and technologies present in Automated Solar Grass Cutter by overviewing multiple research done over time.*
In today's world, Automation is a very important part of invention. We have witnessed devices used to cut grass over the lawns are manually handled; and as it consumes more power it caused pollution and loss and energy. Because of this, automation for the given system, started to evolve which will reduce the human efforts. The design is made to clear the targeted area and providing guidance for the same. With the solar panel which is being used to provide power for the system, energy and power consumption for the system is minimised. In this paper different technologies and their use are discussed which can be implemented for grass cutting along with the mechanism of collecting the trimmed grassusing sensorsand robotic arm.

Keywords: *Arduino Uno, Cutter, Pick and place action, Renewable energy, Robotic car, Rotary encoder, Solar panel.*

1. Introduction

The different types of grass cutters are accessible for people, like electric grass cutter, gasoline grass cutter etc.
In a gasoline grass cutter, as there is a requirement of fuel to drive the engine, it increases the pollution and also has noisy operation. And electric grass cutter is working on electricity through electric motor. This cutter has supply through long wires and also the weight of the device is more and all of this increases the difficulty in operation.
So, to solve the above-mentioned problems, our designed system provides a robotic assembly that can be used for cutting the grass and also has mechanism to clear off the trimmed grass. The system works with the help ofsome partially automation work forassistance, along with a solar panel and a battery to maintain the power supply, placed over the system. The system consists of grass cutter, solar panel, motors (DC and Servo) and driver IC, rotary encoder, robotic body interfaced to an ATMEGA 328 P microcontroller.
Our proposed system shows how technology is being used to reduce human efforts as well as to efficiently utilize the renewable source of energy.
As part of our pre-study, we conducted an elaborate literature survey. The literature survey presents an overview on the articles which we have gone through for Solar Grass Cutter System.

Smart Solar Grass Cutter Robot for Grass Trimming

The idea ofa device with the need of human assistance is put forward to complete the motive of grass cutting. It is made up with the linear blades and works fine even with the climatic change. In this they have used DC motors along with the IR sensors for rotating the blade and for obstacle detection respectively [1].
As this system is manually handled, we have introduced controller-based operation which reduces the human efforts.

Modification of Solar Grass Cutting Machine

In this paper, they put their main aim as pollution control and added some technologies according to the requirements. They have made use of RFID technology which will make the system remotecontrolled. Also, with the use of solarpanel topower up the whole system. The system can be motor driven or can be used manually [3].
As this system is using remote controlled based application which still involves human efforts, we decided to take it one step further using controllers and sensors.

Fully Automated Solar Grass Cutter

The system is designed with the battery with 6V to power up the motors that are connected to wheels and to the cutter. Solar panel is also installed to provide continuous power without any need of charging it externally. With the use of controller 8051, control mechanism is given to the hardware. Interfacing of motors, cutter as well as ultrasonic sensor is executed. Once the obstacle is detected using ultrasonic sensor,

e ISSN 2348 –1269, Print ISSN 2349-5138
Marathwada Mitra Mandal, Pune

controller sends command to stop the cutter, else, system is programmed to move forward if no obstacle is detected.Using ultrasonic sensor's signal as command, every time, controller is designed to move in forward direction or to stop the system. [4].
Since they are here using 8051 family controller which has no special feature for today's electronic world, we decided to take ATMEGA family controller.

II. Component Selection

A. Hardware Description-

a. Solar Panel- Photovoltaic solar panels absorb sunlight as a source of energy to generate electricity. A photovoltaic (PV) module typically comes with 6x10 photovoltaic solar cells connected internally. The most crucial parameter to distinguish one solar cell from other is efficiency. Whatever energy produced from the solar cell and input energy provided by the sun, together gives us efficiency. The efficiency of a photovoltaic cell is determined as the fraction of incident power which is converted to electricity and is defined as:

$$P_{max} = V_{OC} I_{SC} FF$$

$$\eta = \frac{V_{OC} I_{SC} FF}{P_{in}}$$

Where:
V_{oc} is the open-circuit voltage;
I_{sc} is the short-circuit current;
FF is the fill factor and
η is the efficiency.
To know what wattage of solar panel is required we have used the above equation to calculate each component's required power.

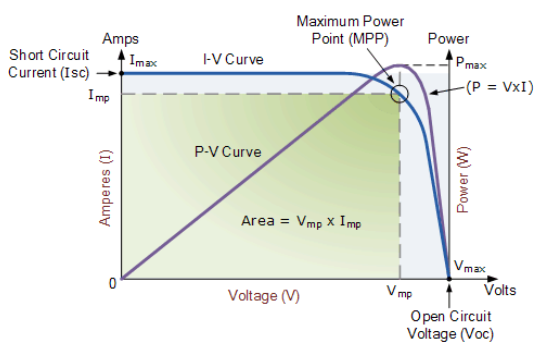

Fig. 1 Solar panel I-V Characteristics

The graph shown depicts typical voltage versus current characteristics observed for a silicon solar cell. The total power given out by a solar cell is calculated by taking product of voltage and current.

b. Arduino (ATMEGA 328P)- The Arduino UNO is an open-source microcontroller board based on the Microchip ATmega328P microcontroller and developed by Arduino.cc6 analog and 14 digital pinouts are taken out from the board. It is programmable with the Arduino IDE (Integrated Development Environment) via a type B USB cable. Different powering methods can be used such as USB cable or any external battery of 9 volts. But board can tolerate voltage ranging from 7V to 20V.

Table 1: Comparison between different controllers.

Parameter	PIC family	Arduino uno
Board specification	controller IC	**Open source prototyping board**
PWM pins	2 pins	**6 pins**

Current rating	25mA	**40mA**
Voltage rating	5v	**5v,3.3v**
Programming	complex	**simple**

c. Servo Motors**-**These motors can drive high output power being light weight and tiny. The angle of rotation is approximately 180 degrees that is 90 degrees in each direction. To drive motors, we can use available servo codes with library and corresponding hardware. Here we are using 2 mini servo (SG90) having less torque of 2.5kgcm and one having high torque of 10kgcm (v009). Servo motors have only 3 pins namely ground, VCC, PWM pin. These motors work on 4.8volts to 6volts. Easy to interface and accurate output. We have selected these motors as we need précised rotation for robotic arms in pick and place assembly.

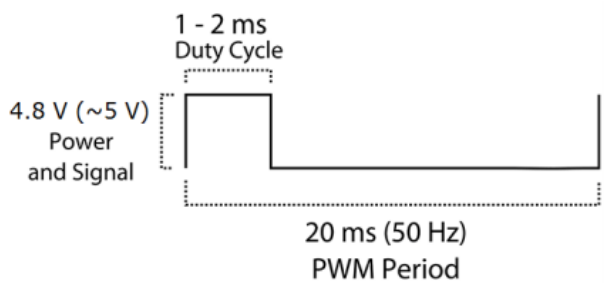

Above figure shows PWM signal which has 50HZ frequency. This frequency corresponds to 20ms PWM period. With on time variation from 1ms to 2ms.For on time period,
1ms →0º angle of rotation,
1.5ms → 90º angle of rotation,
2ms → 180º angle of rotation.

d. DC Motors**-** This is high torque geared motor which gives 25kgcm of maximum torque. DC motor comes with a gear box and shaft and this assembly is mechanically commutated and powered by direct current. For our application we have chosen 60rpm motor which operated on 12v DC. High torque motor is used because it will bear the weight of whole assembly including solar panel.

e. Driver L298N IC**-**The L298N is an integrated monolithic circuit in a 15- lead Multiwatt and PowerSO20 packages. To enable or disable the device, use of two enable inputs are given, which are irrespective of the incoming signal. Each of the emitter terminal from lower transistors are shorted, while output terminals of the same gets connected to the external sensing resistor. In case of logic working at low voltage levels, extra input source is supported.

F. DC motor with Cutter**-** Cutter is mechanical equipment which has sharp blades for cutting the grass. To this assembly high rpm near about 300 rpm DC motor is used which has high speed and it will move cutter in the high speed.

g. Rotary Encoder (photo interrupter)-A photo interrupter is transmission-type photo sensor that integrates optical receiving and transmitting elements in a single package. As the light source gets disturbed, device is called photo interrupter. A long-life GaAs infrared photodiode is utilized for output while for detection of light package contains phototransistor and photo IC.

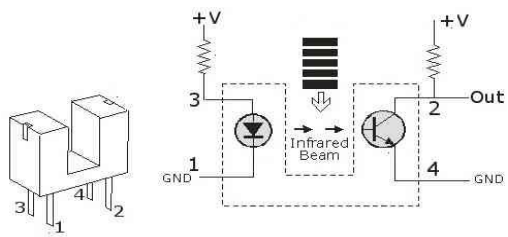

(a)

e ISSN 2348 –1269, Print ISSN 2349-5138
Marathwada Mitra Mandal, Pune

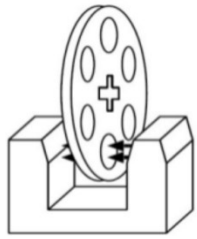

(b)

Fig. 2 (a) Photo interrupter (b) rotary encoder with interrupter

Calculations-

1. Convert the sensor value to standard units.

We have $\frac{\text{ticks}}{\text{Revolution}}$

we want $\frac{\text{wheel angle}}{\text{tick}}$

2. Using dimensional analysis above equation gets multiplied by radius of the wheel and time period Radius of wheel*

$\frac{\text{wheel angle}}{\text{tick}}$

B. Software Used

Arduino IDE- Open source software is used to execute the codes of Arduino boards. Easy to handle.

III. Methodology

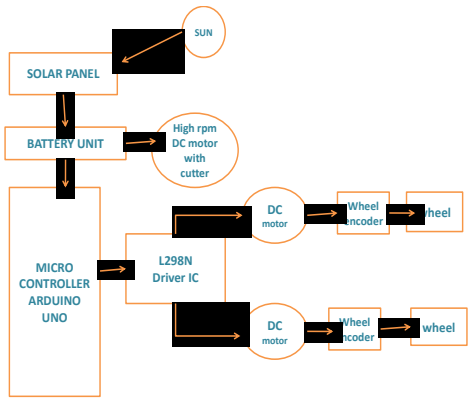

Fig.3 Block Diagram of System

The design contains a microcontroller (ATMEGA 328P), solar panels, rechargeable batteries, robotic arm (designed using servo motors), cutter, DC motors with wheels are attached to it. The robot is guided with the assistance of rotary encoder placed on the shaft of DC motor. Adding these components together we get our system designed with robotic arms. The key part of our system is robotic arms which is newly introduced in our system which makes our system unique among the all. Robotic arm assembly was never used in previous system and purpose of this assembly is to collect the trimmed grass. Robotic arm assembly is

designed using 3 servo motors out of three one is of high torque which moves the arm in 0 degree – 180 degree. And other two are of lesser torque which moves simultaneously through 0 degree-90degree. Solar panel absorbs energy from the sun and rechargeable battery unit is attached to it which will supply electric energy to power up the system. The purpose of the solar panel is to utilize natural energy which will gives us pollution free system.

We are trying to build an automated system which will be free from human assistance. For this we are building three-wheel robotic car. Out of these two wheels are attached to DC motors which is of the speed 60rpm and driver IC L298N is interfaced. We are using caster wheel just to balance our robotic car. The pair of wheel encoder is mounted on the shaft of DC motor which will assist our robot to move forward, backward, to take right or left turn. Encoder is also used to guide wheel motors to reach till the defined distance. Robotic arm assembly is designed using 3 servo motors, out of three, one is of high torque which moves the arm in 0 degree – 180 degree and other two are of lesser torque which moves simultaneously through 0 degree-90degree. Solar panel absorbs solar energy and rechargeable battery unit is attached to it which will supply electric energy to power up the system. The purpose of the solar panel is to utilize natural energy which will give us pollution free system.

To make system human free the robot should move automatically.For this purpose, the robotic car will move in the targeted area which will be controlled through program.

For example,

if robot is at initial position in targeted field which covers a distance of 100 meters in forward direction. The command of covering this distance is given by program that is distance is preprogrammed in microcontroller. The main aim of the system is to trim the grass in targeted field. So the mechanical cutter is attached to high rpm DC motor which will continuously in on state while trimming the grass. Once the defined distance is achieved, robotic arms perform the action of picking and placing the grass.

Table1. Comparison between conventional and automated grass cutter

Parameters	**Conventional solar cutter**	**Automated grass cutter with robotic arms**
pollution	Causes pollution	Pollution free system
effort	More effort	Less efforts
Human interference	yes	no
Robotic arm for cleaning purpose	no	Yes
efficient	no	yes

A. Algorithm

1. Place the robot in targeted field.
2. Start the system.
3. If DC motor associated with cutter is on then move forward.
4. For every forward movement of the robot, start collecting the trimmed grass.
5. Once reached to the defined distance; stop the robot.
6. Start servo motors associated with robotic arms.
7. If servo motors are on then pick up the trimmed grass.
8. For every pick-up action, place the trimmed grass in dumper.
9. Repeat steps 7 and 8 for 2 times.
10. Start the DC motors associated with wheels.
11. If the motors are on, then turn the robot in right direction.
12. Repeat the procedure from step 3 till step 9.
13. On external interrupter stop the whole system.
14. End

IV. Results

We have tested the robotic arm which is required for clearing off mechanism. We have tested the arduino code for the same.

e ISSN 2348 –1269, Print ISSN 2349-5138
Marathwada Mitra Mandal, Pune

We have installed the forward, backward, turn left, turn right movements for our robot design using DC motors, motor driver IC and wheels.
Following are the images for our systems result. The images also show the current design of our project.

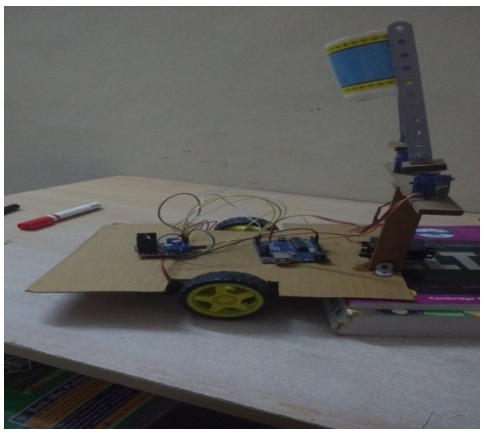

Fig. 4 Assembly of robotic arms with car chassis

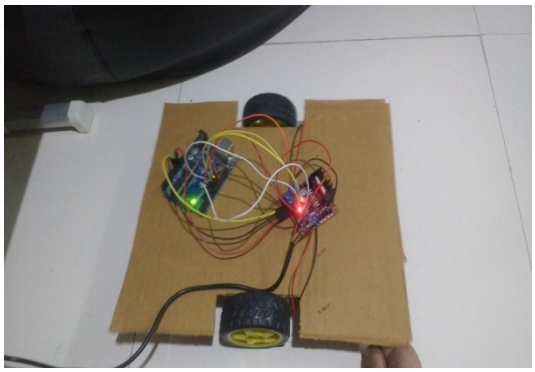

Fig.5 Uploading code for the system

V. Conclusion

According to the design and Algorithms proposed for the system, we can implement the movement of the DC motor in forward, backward movement. The robotic arm arrangement which has been made for picking the trimmed grass can be controlled precisely using servo motors.

VI. Future Scope

- This can be future improved with the following modifications: The modification can be done by adding joy stick, camera or ESP modules.
- This project can be thought as an IOT based project where user can access the system anytime and from anywhere through mobile application.

VII. References

1. Ashish Kumar Chaudhari, Yuvraj Sahu, Pramod kumarSahu, Subhash Chandra Verma, Smart Solar Grass Cutter Robot for Grass Trimming, International Journal of Advance Research and Innovative Ideas in Education, Vol. 2, 2016, 1246-1251.
2. P. Amrutesh1, B. Sagar2, B. Venu3 1Student, B.Tech(Mechanical Engineering), MeRITS, A.P, India,2Student,B.Tech(Mechanical Engineering), MeRITS ,A.P, India, 3Asst.Professor,Mechanical engineering, MeRITS,A.P, India.
3. IJIRST –International Journal for Innovative Research in Science & Technology| Volume 2 | Issue 11 | April 2016.
4. nevonprojects.com/fully-automated-solar-grass-cutter/

5. International Research Journal of Engineering and Technology (IRJET), Prof. S.M.Patil1, Bhandirge Prajakta2, Kumbhar Snehal3, PatilDhanashri4. March 2018.
6. http://www.alternative-energy-tutorials.com/energy-articles/solar-cell-i-v-characteristic.html
7. https://www.pveducation.org/pvcdrom/solar-cell-operation/solar-cell-efficiency
8. https://www.electroschematics.com/10494/arduino-optical-position-rotary-encoder/
9. https://www.youtube.com/watch?v=oLBYHbLO8W0
10. http://forums.trossenrobotics.com/tutorials/introduction-129/introduction-to-encoders-3256/
11. https://dronebotworkshop.com/robot-car-with-speed-sensors/#Optical_Interrupter_Sensor

e ISSN 2348 –1269, Print ISSN 2349-5138
Marathwada Mitra Mandal, Pune

Economical Ankle Brachial Index Monitoring System

Kunal Satav, Mrunmayi Jawadekar, Pradnya Kondhekar, Prof. R. R. Malekar
Marathwada Mitra Mandal's College of Engineering
Pune, India

ABSTRACT: *Ankle Brachial Index Monitoring System was made to display the ratio of both the blood pressure of left and right side of the body that is both arms and legs respectively. Based on the ratio calculated, the blood clots were detected and help the doctor to predict the disease and accordingly guidance is given. The ratio was displayed on the android app using IOT technique which can be used by patients relatives and doctors for monitoring. Ideally the ratio for normal condition must be 1:1 but practically it was not possible due to the different conditions like body structure, age, position of the body, recent activities performed, illness if any, heart conditions, so on.*

Keywords: *ABI, Diastolic Pressure, Left ABI, PAD (Peripheral Arterial Disease), Right ABI, Systolic Pressure.*

1. Introduction

Now a days ordinary Blood pressure monitors (Sphygmomanometer) are used for measuring blood pressure of a person. This Sphygmomanometer provides us value of high (systolic) or low (diastolic) blood pressure. In this system, "Ankle Brachial Index monitoring system" will display the ratio of the two different blood pressures that is of left and right part of the body. Based on this ratio, doctors will predict what disease or problems that person is suffering from or can detect the problems in the early stages. The Ankle Brachial index was used to diagnose PAD. Blood clots can be recognized by doctors at earlier stages using this ratio. Similar ABI monitoring systems are available in market, we are aiming to downsize the system in a more affordable and simple way.

[1] The measurement of the force exerted on the blood vessels walls is called as Blood pressure. When the heart pumps blood many different events takes place in the body they are called as Cardiac cycle and during this cycle different measurements are taken at various points of the body. The unit for blood pressure is mmHg. During the measurement patient body should be parallel to ground and his arm should also be parallel to heart. We get the systolic Blood pressure by using the handcuff around the arm and inflating it till there is negligible flow of blood, afterwards it is deflated till pulse of the patient can be detected and also recorded. When the pulse are not able to detect next reading is taken called as diastolic pressure or low pressure, this occurs between the two heart beat period. In the Blood pressure reading eg-120/60 where 120 indicates systolic and 60 indicates diastolic reading. Pulsating of the arteries due to heart beat in medical term is called as a persons pulse. A healthy person has a pulse rate of 60 to 100 BPM (Beats Per Min). When at rest it can drop to 40 BPM, after physical workout it can go high upto 200-220 BPM. Youth have higher pulse rate. Change in blood pressure during heart contraction is called as pulse pressure.

Pulse Pressure = Systolic Pressure - Diastolic Pressure

- Precautions to be taken for accurate readings :-
  a. Patient should not consume tobacco caffeine 30 Min prior to checkup.
  b. Patient should be made to relax for 5 Min without any movement and talking.
  c. cuff should be wrapped properly on the arm.
  d. Patient must be completely at ease.
  e. Patient should be made to sleep parallel to ground that is cuff must be at heart level.

[2] The ratio of systolic pressure of Ankle to systolic pressure of arm is called as Ankle Brachial Index. It is used for diagnosis of PAD and also cardiovascular disease. The patient are allowed to rest for 10 min in supine position for measuring the systolic pressure from both Brachial arteries and legs. This way ABI can be measured. A hand held Doppler instrument ranging from 5 to 10-mHz is used to record the systolic pressure. Blood pressure cuffs are used at the ankle. Initially it is mandatory to begin with right arm, right leg, then left leg and lastly the left arm. Out of two arteries at the ankle, highest pressure was chosen and divided by systolic pressure of the Brachial arteries, to determine the ABI value. Ideally there should be minimum inter-arm systolic pressure (<= 10 mmHg) gradient for routine checkup. Risk for PAD is more if there is continuous difference in pressure between the arms greater than 10 mmHg .

[3] Its good to measure blood pressure at the Brachial artery near the elbow (crook) of the arm than elsewhere of the body, if it is a perfectly healthy circulatory system. In ankle Brachial index comparison of blood pressure from two locations is made and if the difference is large then it will reflect to PAD and blood clots can be detected. Ankle Brachial Index test is must for any person with the symptoms of PAD. Pain or cramping in the calves, thighs, hips, or buttocks when walking, climbing stairs, or exercising that fades with rest are the common sign of this condition. In medical terms it is called as claudication which is caused by very little blood flow. Also feet, or legs that take longer time to heal or does not heal and the wounds on the toes, legs become dark in shade, or feels cool when they are touched are other signs. Ankle Brachial is must for smokers, former smokers above the age of 50 years; diabetic patient above 50, patients above 70, high blood pressure, high cholesterol; anyone with ancestors having heart disease; or who had a stroke or mini-stroke. Coronary artery disease causes symptoms when it is severe.
[4] The studies were indicated that there may be decrease in the ABI due to the age and height differences, also it is affected due to incorrect sequence of measurement. According to studies the ABI of right leg was 0.03 greater than that of left.
[5] The graph below indicates the risk of PAD in men and women at different age.

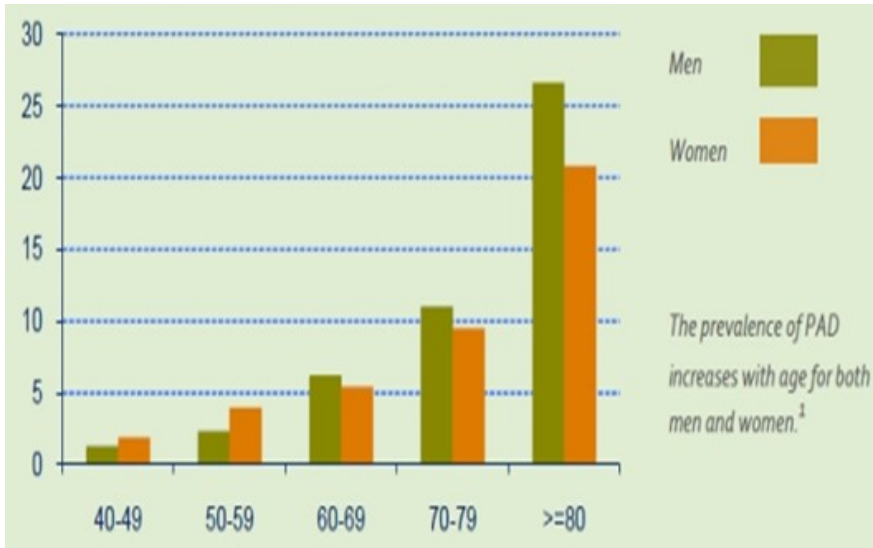

Figure No. 1

[6] Different methods for measuring blood pressure are invasive and non invasive. In invasive method arterial pressure is directly measured by inserting cannula needle in required artery. It is mostly used in ICU (Intensive care unit). In non invasive method a comfortable double finger cuff is used for patient which is easy to wear and place on the hand. The systolic, diastolic, mean blood pressure and heart rate is displayed. They have used oscillometric method, using piezoresistive pressure sensor for automatic measurement of blood pressure and stored the same in Storage Device.
We have used 4 BP machines for right arm, left arm, right leg and left leg. The blood pressure from all these 4 parts is measured and then the ratio is calculated using the formula

$$Right\ ABI = \frac{Highest\ Pressure\ in\ Right\ Foot}{Highest\ Pressure\ in\ Both\ Arms}$$

$$Left\ ABI = \frac{Highest\ Pressure\ in\ Left\ Foot}{Highest\ Pressure\ in\ Both\ Arms}$$

and then the ratio is displayed on the LCD (16*2 display) and the data is transferred/send to the doctor using Bluetooth to android app using IOT technique.Then doctors will predict the disease or clots if any, based on the correspondence table and accordingly the medication will be given.

e ISSN 2348 –1269, Print ISSN 2349-5138
Marathwada Mitra Mandal, Pune

Table No. 1: Correspondence Table

ABI Value	Interpretation	Recommendation
Greater than 1.4	Calcification/ Vessel Hardening	Refer to Vascular Specialist
1.0 - 1.4	Normal	None
0.9 - 1.0	Acceptable	
0.8 - 0.9	Some Arterial Disease	Treat Risk Factors
0.5 - 0.8	Moderate Arterial Disease	Refer to Vascular Specialist
< 0.5	Severe Arterial Disease	Refer to Vascular Specialist

II. Methodology

A. Block Diagram

This block contains 4 blood pressure monitors which are used to measure patient blood pressure. The blood pressure monitor measures the blood pressure in following way- With an oscillatory device, a cuff is inflated over the upper arm or wrist. The output of BP machines is given to the signal conditioning unit, which helps the Arduino for further processing.

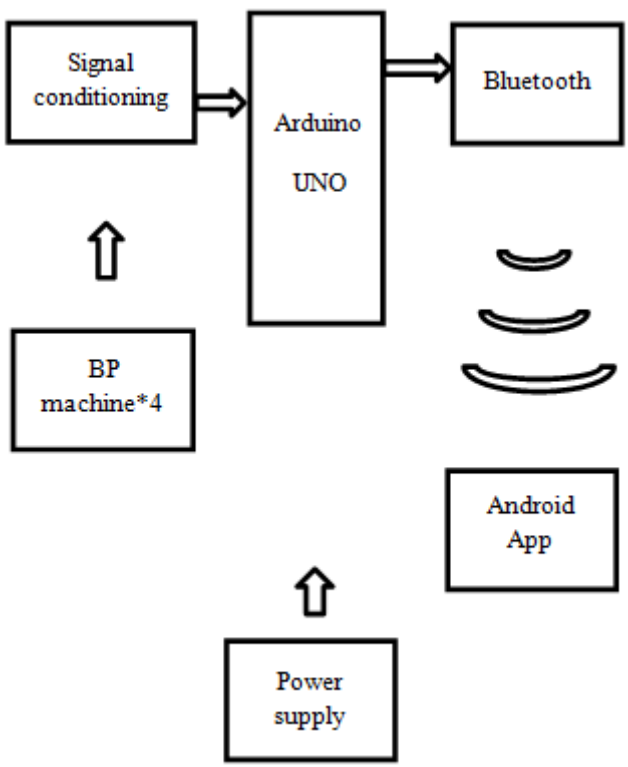

Figure No. 2

[7] The BP machine consist of pressure sensor (piezoresistive) which gives the output from 5 to 10 volts, with pressure up-to 6.5 bar. It has good response time. And the operating temperature is between -20 to 85 degree Celsius with variety of applications in medical field and also in process controls. This measured blood pressure is sent to Arduino which runs the Ankle Brachial algorithm. Arduino Uno is interfaced with Bluetooth for transferring the calculated ratio.

[8] The module used for Bluetooth is HC-05 whose operating range is <100 m, it is IEEE 802.15.1 protocol and supports serial communication., with master slave configuration. It has 6 pins - EN, Vcc, GND, TxD, RxD, state'5 to 3.3 volts is necessary for the module to operate.

A android mobile application which will be connected via Bluetooth to the transmitter once the ratio is received by mobile application. When the ratio is received by the mobile application via Bluetooth it displays the ratio along with a remark.

B. Algorithm

1. Start.
2. Switch on blood pressure monitor and Arduino.
3. Check if Bluetooth is connected to the device.
4. Everything's ready now start the BP machine through app using 'start' command.
5. Air is pumped through an inbuilt compressor. Hands as well as legs cuff are inflated.
6. Pressure difference is measured by using a piezoresistive pressure sensor.
7. Corresponding voltage generated by sensor is provided to micro controller which converts the voltage to systolic and diastolic pressure.
8. Blood pressures from both hands as well as legs is given to Arduino.
9. Arduino runs the ankle Brachial algorithm and provides a ratio depending on the blood pressure of the body.
10. Calculated ratio is then transmitted by Arduino via Bluetooth.
11. The transmitted ratio is displayed on the app along with a remark suggesting the condition.
12. End.

III. Acknowledgment

We are profoundly grateful to Dr. Yogesh Gurjar Sir from Dispotronics Pvt. Ltd, for expert guidance and encouragement, to see that this project rights its target, since its commencement to its completion.
We are indebted a lot to Prof. R. R. Malekar who has provided us continuous guidance untiringly with a very large heart. We sincerely thank her for putting faith in us. She has been always kind and generous enough so as to provide us ongoing support, guidance and motivation which has resulted in completing this project which is also the result of large vision with due inquisitiveness provided by her.
We are very thankful to Prof. M. A. Dudhedia, project coordinator, whose invaluable guidance also supported us for the completion of the project.

IV. Results

Blood pressure is measured by sensing the systolic pressure and diastolic pressure and then the ratio is obtained and displayed it on android app via Bluetooth. Accuracy upto 70% to 80% is obtained.

V. Conclusion

Calculated and displayed the ratio of the arm and leg of right and left side of the body respectively and provided to the doctors for further analysis like preventing the Cardiovascular Diseases, Peripheral Artery Diseases (PAD).

VI. Future Scope

In future we can make the complete system wireless by using BP machine with Bluetooth and sending all the data to doctors through app, due to this the multi-user functionality can be used.

VII. References

1. http://www.gimaitaly.com/DocumentiGIMA/Manuali/EN/M23520EN.pdf
2. Stanford Medicine 25,"*Measuring and Understanding the Ankle Brachial Index (ABI)*"
3. Harvard Medical Schoo,l" *Ankle-Brachial Index*" October 2008.
4. Victor Aboyans, Michael H. Criqui, Pierre Abraham " *Measurement and Interpretation of the Ankle-Brachial Index*" A Scientific Statement From the American Heart Association, 16 Nov 2012,Circulation. 2012; 126:2890–2909.
5. https://www.cdc.gov/dhdsp/data_statistics/fact_sheets/fs_pad.htm
6. Ratnadewi,"*Automatic Blood Pressure Detector Using Arduino to Measure Blood Pressure in Indonesian People Age 19-27 Years Old*", International Journal of Engineering & Technology, 7 (2.5) (2018) 115-118.
7. http://html.alldatasheet.com/html-pdf/115115/ETC1/SPD100G/198/2/SPD100G.html
8. https://www.electronicwings.com/sensors-modules/bluetooth-module-hc-05-

e ISSN 2348 –1269, Print ISSN 2349-5138
Marathwada Mitra Mandal, Pune

Automatic Shiftable Road Divider

Akash Korke, Disha Patil, Dipali Wakure, Prof. Vishal Salve
Dept. of E&TC, Marathawada Mitra Mandal's College of Engineering,
Pune, India

ABSTRACT: *This paper presents a project on automatic shiftable road divider. From research we have seen that in our day to day life, we came across traffic while travelling. Traffic on highway is increasing day by day. It is very difficult to travel in such a heavy traffic. This results in delay to reach our destination. There is no other way to get out of this traffic early because of the static dividers on road. This is also time consuming as there are no movable dividers available on road which will help us in reducing traffic. This current system of the static dividers are not as much efficient to help in reducing the traffic. This paper contains an information about the system which will help us to solve this problem. This system "Automatic Shiftable Road Divider" will help in reducing and managing traffic and will help to reach our destination in less time.*

Keywords: *Raspberry Pi, Dc Motor, TOM-TOM API, IR sensor.*

1. Introduction

In coming years, with an ever increasing rate of development in metro cities around the world, there will be proportional increase in numbers of automobiles on roads. Although the number of vehicles using the roads has been increased, the static road infrastructure is almost the same.[4][5]Which will result in the congestion, unpredictable travel time delays, road accidents, etc. These problems are taking a serious shape. Traffic congestion has been a major problem for metropolitan public in spite of measures being taken to mitigate and reduce it. It has become the major challenge for developers in urban areas for planning of sustainable cities. The concept of movable dividers were from 90's, only reason is traffic congestion. At that period there was one machine developed which is called as "Zipper Machine". This machine is used to shift the dividers from one lane of the road to the other. The first working model of Zipper machine was bought by Hawaii department of transport in late 90's.This machine contains s-shape inverted conveyor channel which lifts the barrier segment weight of about 450kgs. The length of the machine is about 1000 feet. Whenever there is traffic congestion the machine will move along with the barrier segment that contains the dividers will also moves. This result in the width of lanes. In the proposed model we are not using any machine and operating it manually rather we are operating it automatically by using the two dividers namely normal and extended dividers. In this paper we tracking firstly the traffic using map API called TOM TOM API. The data from the TOM TOM API will be given to the raspberry pi simultaneously it will also store on the database for the future use. According to the data raspberry pi will take an action of shifting of dividers.

2. Block Diagram

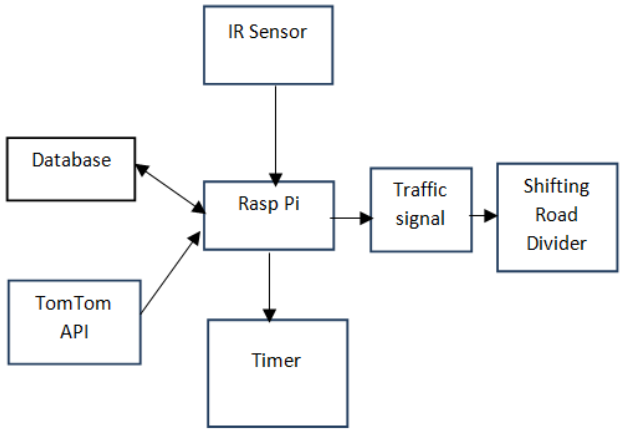

Fig. 2.1 Block Diagram

2.1 Raspberry PI

Raspberry Pi is the main heart of our system. It is the single board computer which contains SOC i.e. system on chip.[2] In this system inputs to the Raspberry Pi are API, database, sensor. API gives the exact traffic location, this data is fetch by raspberry pi. Then it further monitors the data and decides whether the traffic density is on left side or right side of the lane. If the traffic density is high then it activates the red signal. After that the timer turns on and shifting of divider takes place. Then the signal turns green and the timer turns off.

Fig.2.1.1 Raspberry Pi

2.2 Tom Tom API

This API shows the online traffic status. It is nothing but a map API.[1]TOM TOM API works through the –

- Traffic Incident Rest API
- Traffic Incident API

Traffic incident rest API provides the traffic information for map view. And the traffic incident API gives the information about the traffic jam and traffic related incident. Also about start and end location, road name, distance of traffic jams. The information or the data is updated in every two minutes with latest traffic speed information.

Road categories in TOM TOM API depends on zoom level. Severity level of traffic condition is indicated by color tubes. It also indicates accurate location of your traffic.

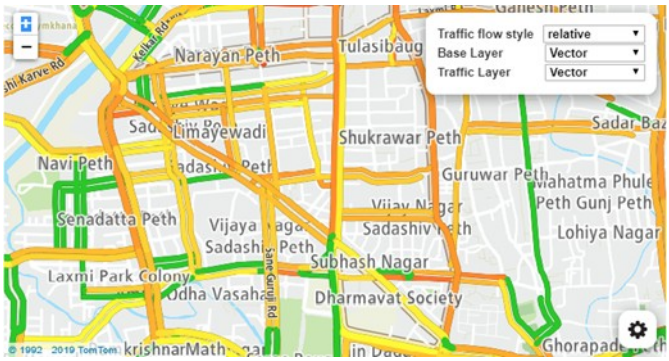

Fig. 2.2.1 Map view

2.3 IR Sensor

Infrared sensor is an elctronic sesnor that measures infrared light radiating from objects in its field of view.[3][6]Detection range of IR sensor is 2cm -30 cm and it can be adjust using potentiometer.IR sensor detects if there is any vehicle on the divider then it will send the signal to raspberry pi afterward raspberry pi stop the shifting of the divider.

e ISSN 2348 –1269, Print ISSN 2349-5138
Marathwada Mitra Mandal, Pune

Fig. 2.3.1 IR sensor

2.4 Cloud Database

Database we are using is Microsoft Azure.It is a multifunctional unit.It is a data storing unit.It is used to store the real time data for small period. Different functions of cloud database are-

1. Database control
2. Data storing

It provides the various information or data related to the region of traffic and the data is further passed to the controller.Data stored in the cloud datbase is real time data send by TOM TOM API through controller. This includes the real time traffic monitoring.

3. System Implimentation

As per the above block diagram, the data related to the traffic jams is fetch by raspberry pi from the TOM TOM API. API gives the exact traffic details. Same data is simultaneously stored on the cloud. According to the information raspberry pi will decide the shifting of the dividers.If the traffic is more on the left side of the lane, then timer turns red and the shifting of divider will takes place at the right side of the lane and vice versa. At the same time ir sensor will check whether there is any vehicle on the divider or not. If there is any vehicle on didvider it will send the signal to the raspberry pi,then raspberry pi will stop the shifting. After all this process traffic will move easily. Thus we have implimenated the system succesfully.

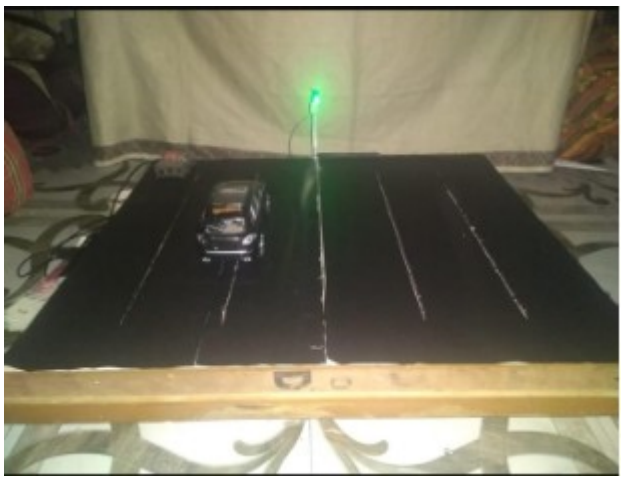

Fig.3.1 System Implimenatition

4. Flow Chart

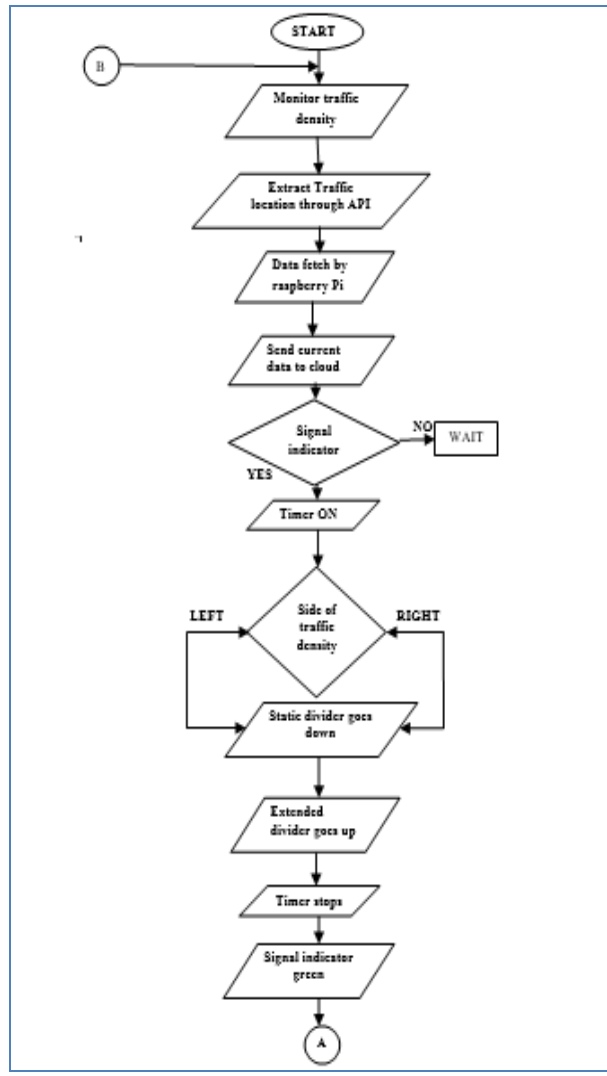
START
B
Monitor traffic density
Extract Traffic location through API
Data fetch by raspberry Pi
Send current data to cloud
Signal indicator
NO
WAIT
YES
Timer ON
LEFT
Side of traffic density
RIGHT
Static divider goes down
Extended divider goes up
Timer stops
Signal indicator green
A

e ISSN 2348 –1269, Print ISSN 2349-5138
Marathwada Mitra Mandal, Pune

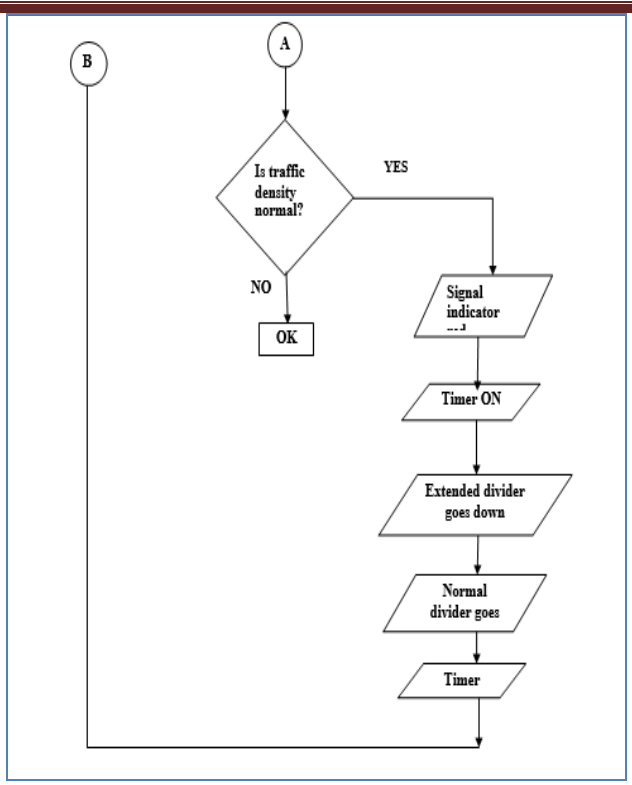

Fig. 4.1 Working flowchart.

5. Conclusion

In this paper we have successfully designed and developed a demo model of "Controlling of traffic using TOM TOM API" and IR sensor in which the result are satisfactory. Since it is a demo model we have only shown it through one way of traffic using API. The traffic congestion data from the API is given to raspberry pi model. This will be useful in real time traffic congestion in more than one direction, then also this module can be used rather than the basic sensors. Side by side we are saving the data on the cloud which will be useful for the future purpose.

6. Future Scope

1. Traffic should be predicted before time.
2. Shifting will be takes place before traffic jams.

7. References

1. http://developer.tomtom.com/freemaps
2. http://en.m.wikipedia.org/wiki/Raspberry_Pi
3. http://www.elprocus.com/infrared-ir-sensor-cicuit-and-working/
4. Movable traffic divider: A Congestion release strategy-IRD India (2017), vol-5, issue 1.
5. S. Jothirmayee, G.Vamshi Krishna, J. Nanditha and B. Shashnak Yadav. Cotrolling of Traffic Using Movable Divider .International Journal of Advance Engineering and Research Development. Vol 5, Issues 04, April 2018.
6. Electronic circuit guide book-Sensor-by JOSEPH J.CARR

Object Detection for Unmanned Aerial Vehicles using SSD Mobilenet

Nikhil Nagarkar, Pranil Angre, Mahesh Arangale, Prof. Disha Parkhi
Electronics and Telecommunication Department, Marathwada Mitra Mandal College of Engineering, Pune, India

ABSTRACT: *Unmanned aerial vehicle is a new exciting technology which is rapidly growing in the field of reconnaissance, search-and-rescue, infrastructure inspection and acquiring land data. They play a crucial role in acquiring imagery data where manned missions cannot take place. Various technologies have been explored to make them autonomous and to reduce human intervention. By adding Object detection to UAV, it will make them smart and more robust and no human intervention will be needed. The hardware requirement for object detection is lot in terms of space and this cannot accommodate on a small drone.At present some technologies are in work to implement object detection for UAV's using cloud computing, but cloud computing has a problem of latency for real time systems. Our paper aims at resolving this by providing a localized solution using lightweight machine learning models which can run on laptops or smartphones.It will be easy to implement and low cost than the other techniques.*

Keywords: *Drone, Object detection, SSD Mobilenet, Unmanned aerial vehicles (UAV).*

1. Introduction

AN Unmanned Aerial Vehicle (UAV) also known as drone is an aircraft which is driven by the pilot /user from ground using a remote control. There has been drastically change in the applications of UAVs in recent years such as surveillance, reconnaissance, rescue operation, agriculture and asset inspection. UAVs play vital role for human less applications. They can reach in areas where it's impossible for humans to make way for them to carry out the task. UAVs can be operated under remote control by a human operator as well as autonomously using computer. UAVs fly because of the air lift provided by the propellers. The number of propellers will vary according to the configuration of the drone. They can carry a lethal or non-lethal load, earlier they were used mostly for military applications. In upcoming digital life, its applications by civilians is significantly rising.

Visual Detection for all the above applications is an important element. Object detection consist of Convolutional Neural Networks (CNNs) which require immense computation power and this id difficult to make available on a drone. Various approaches have been introduced to tackle these challenges.

However, to develop a fully autonomous object detection in real-time is a challenging task. Many application specific drones have been developed for the same [3][4][5]but they suffer from the issue of latency, and costly systems[2].

In this paper we have proposed a different approach in which the video feed will be transmitted to device which is remote from the drone and it will perform the video processing required for object detection. This project would be capturing images continuously by the camera and the corresponding video would be screened on the computer. Parallelly, multiple objects would be detected and show in a box with the label. The accuracy of the detected object would be also detected.

II. Overview

A. Unmanned Aerial Vehicles

Unmanned aerial vehicles as the name suggests are unmanned flying vehicles which doesn't need a pilot in craft present but can be flown from a distant location using a remote control. The use of unmanned aerial vehicles in the private and commercial sector has been increasing in an unprecedented speed[1]. Many applications such as surveillance, search and rescue, photography is done with the use of drones. Drones are a feasible solution where manned mission is difficult or costly where the drone can be controlled from a distant location. At present the trend is tomake drones autonomous by adding technologies such as collision avoidance, automatic route finding,object tracking and object detection[1]. The main challenge is the visual navigation of the surrounding environment[8].This can be tackled using object detection but providing it with real time constraints is another obstacle[9]. In our work we try to explore a solution which is feasible and cost effective.

e ISSN 2348 –1269, Print ISSN 2349-5138
Marathwada Mitra Mandal, Pune

B. Deep Learning for object detection

In this approach convolutional neural networks (CNNs) are used for object detection. CNNs are a well-developed algorithm which outperform some state-of-the-art algorithms in object recognition, object detection and image segmentation[10]. More specifically SSD Mobilenet is used. SSD only needs one single shot to detect multiple objects within the image while regional proposal network (RPN) based approaches such as R-CNN need two shots. It also outperforms YOLO (You only look once) in terms of FPS, accuracy and real time methods[7]. As we will be running the SSD algorithm on a laptop/smartphone the model must be lightweight in terms of computing power. Mobilenet architecture uses depth wiseseparable convolutions which reduces model size and complexity[6]. It is targeted towards mobile and embedded applications in particular[6]. It is the most favorable and most suitable model for our implementation.

III. Hardware Implementation

We designed and programmed our own drone using STM32 which is a 32-bit controller. Our drone will be able to lift a maximum payload of 1.5 kg and will be able to hover at a payload of 1 kg. The maximum angle of freedom is 45 degrees on all axes. Each motor will generate a thrust of 550 gm with a propeller of length and pitch of 4.5. The total thrust generated by the quadcopter is 2200 gm.

Many quadcopter iterations have been developed using Arduino in the quadcopter community [][][][]. Arduino is a 8 bit controller with a clock frequency of 16 MHz and in contrast STM32 is a 32 bit controller having a clock frequency of 72Mhz. Due to this STM32 excels in terms of speed, and processing power in comparison with the Arduino. Because of these reasons STM32 was the right choice for the flight controller.

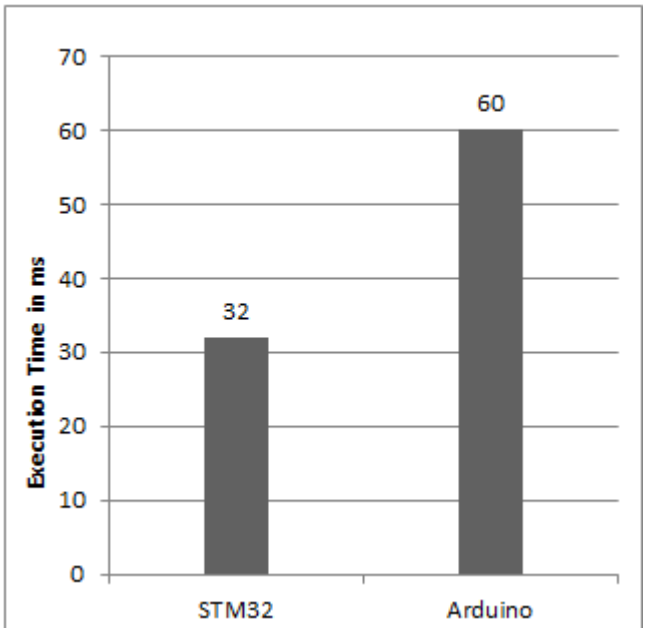

Fig. 1. Graph between Arduino and STM32 and the time taken to perform a floating-point function.

A. Hardware

The drone has one camera and an IMU sensor MPU6050. The MPU6050 has a MEMs accelerometer and MEMs gyroscope. The IMU is implemented by integrating 3-axis gyroscope, 3-axis accelerometer and a DMP (Digital Motion Processor). The Camera is a 5mp giving output video feed at 1080p at 30 fps 720p at 60 fps and 640×480 at 60/90fps. It has a field of vision of 72.3°. A Raspberry Pi 3 b is used to stream the video contents of the camera to a device which is at remote location from the drone.

The motors have a rating of 1000kv each i.e.1000 rotations per volt. This suggests that as the battery voltage will decrease the motor speed will reduce and thus the thrust. Generally, this reduction in thrust is not equal for all four motors so the drone can suffer wobbling. To avoid this the controller measures the battery voltage and compensates the speed for all the motors if there is drop in voltage. Standard PID controller is used to control the drone. The PID Calculates the speed for all the motors with respectto the present position of the drone in terms of x, y, z angles and the input angles given by the transmitter in terms of pitch, roll, and

yaw. The main function of the PID is to change the speed so that the present drone angles can approximate the angles given by transmitter. The battery is 2200 maH 30c LiPo battery which can give up to 20 min of flight-time.

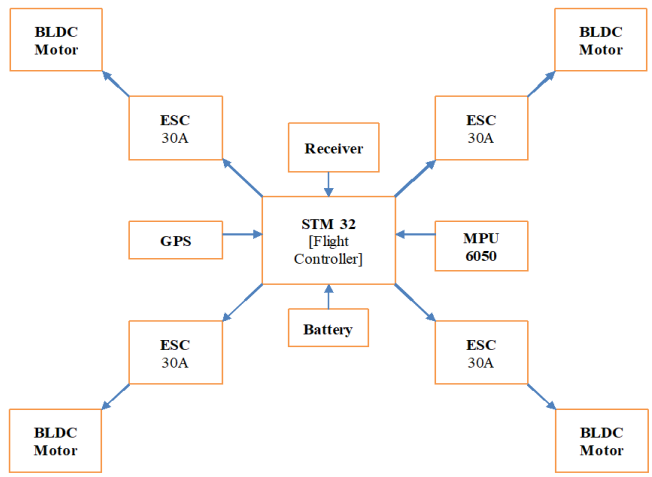

Fig. 2. Block diagram of designed drone

B. Software

The software used for programming the flight controller is Arduino Ide. Its easy for prototyping using Arduino Ide because of included libraries and GUI. The drone needs accurate PWM generation for the electronic speed controller to control the motor speed accurately. The stock Arduino Ide limits this because there use of libraries, so the Ide is used in conjunction with the core files of stm32. For the machine learning part python 3.7 is used to implement the SSD moblienet model. Standard python IDLE environment is used to execute the algorithm as its designed so that it can run on mobile devices as laptop and smartphones.
Raspberry pi can support TCP, UDP and RTSP server hosting. For streaming purposes RTSP (Real Time Stream Protocol).is the preferred protocol. A normal 30 fps video has a lot of redundant frames i.e. few frames can represent the major movements in a video. By doing this the CNN will have less data to process but data loss will be less and will capture the necessary data. Motion is a library developed for video streaming which stiches individual photos and create a seamless video. The fps of this approach is less than normal videos but it does its work for object detection. It supports ad-hoc network as well as support communication over internet. To access the video feed we have to enter the raspberry pi's ip address and the port number in any browser window.

IV. Approach

The aim of this paper is to provide a degree of autonomy to drone using real time object detection. Object detection runs on the framework of Convolutional neural networks and it needs a large amount of computing power. This computing power comes from high end CPUs andGPUs (Graphical processing unit) and they are large in terms of weight, size and power consumption. Accommodating all this on a drone is practically impossible. Cloud Robotics or cloud computing is a way through which it can be done but it suffers through the problem of latency [2] as the video has to be first uploaded to a cloud computer then processed then downloaded by the user. In another approach we can use powerful embedded boards which can fit on a drone as well as crunch the heavy data from the algorithm. It's implemented using a range of GPU oriented boards developed by Nvidia know as Nvidia Jetson[10]. Its constraint is its cost and its power consumption.
In this paper our system uses an approach in whichprocessing the video on the drone is avoided or doing it through cloud computing. Instead the video is transmitted from the drone to a device such as laptop/device which is possessed by the operator of the drone. The video transmission is done through a 4g/3g link, or both the drone as well as the receiver of the video is connected to common network to use ad-hoc

e ISSN 2348 –1269, Print ISSN 2349-5138
Marathwada Mitra Mandal, Pune

transmission. or else a dedicated video transmitter which has a range up to 1-2km. The machine learning model is chosen such that it can run on laptop/smartphone which have computation limitations. The main feature is that is that the object detection will be provided in real time with an fps of 15-20fps on 640×480 resolution. In this way any drone having camera output can run object detection as everyone carry a laptop or smartphone. After detection we can take further actions to follow the objects or to count them.

Method	mAP	FPS	batch size	# Boxes	Input resolution
Faster R-CNN (VGG16)	73.2	7	1	~ 6000	~ 1000 × 600
Fast YOLO	52.7	155	1	98	448 × 448
YOLO (VGG16)	66.4	21	1	98	448 × 448
SSD300	74.3	46	1	8732	300 × 300
SSD512	76.8	19	1	24564	512 × 512
SSD300	74.3	59	8	8732	300 × 300
SSD512	76.8	22	8	24564	512 × 512

Fig. 3. Comparison between different models based on mAP, FPS and resolution

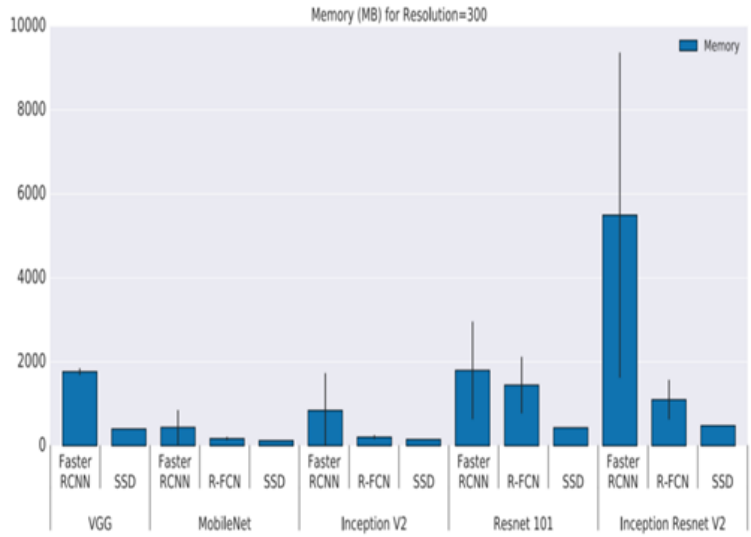

Fig. 4. Comparison of various models based on their memory consumption [11]

V. Conclusion

In this paper we have explored a different approach to provide convolution neural network-based object detection to drones. Traditional methods use cloud computing or development boards which have high processing power but instead in this approach a light weight machine learning algorithm is used on laptop/mobile to process the video remotely. It was tested on self-developed STM32 auto leveling drone.

In the future the drone can be equipped with GPS so that it can hold its position using GPS. It can also travel from one point to another without any intervention of a human pilot using way-point travel. A dedicated video transmitter can be used for seamless transfer of video and for extended range. The machine learning model can be optimized for the use of drone.

Fig. 5. The designed drone based on STM32

References

1. Chun Fui Liew, Danielle DeLatte, Naoya Takeishi, TakehisaYairi, "Recent Developments in Aerial Robotics: A Survey and Prototypes Overview"
2. Shanhe Yi, Zijiang Hao, Qingyang Zhang, Quan Zhang ,Weisong Shi , Qun Li, "LAVEA: Latency-aware Video Analytics on Edge Computing Platform"
3. Anna Gąszczak*a , Toby P.Breckona , Jiwan Han, "Real-time People and Vehicle Detection from UAV Imagery"
4. A.E Jimenez-Cano, J. Braga, G. Heredia and A. Ollero, "Aerial Manipulator for Structure Inspection by Contact from the Underside"
5. Hakon Hagen Helgesen , Frederik StendahlLeira, Thor I. Fossen, Tor Arne Johansen, "Tracking of Ocean Surface Objects from Unmanned Aerial Vehicles with a Pan/Tilt Unit using a Thermal Camera" in Journal of intelligentRobotics, pp 775-793, 2018
6. Andrew G. Howard, Menglong Zhu, Bo Chen, Dmitry Kalenichenko, Weijun Wang, Tobias Weyand, Marco Andreetto, Hartwig Adam "MobileNets: Efficient Convolutional Neural Networks for Mobile Vision Applications"
7. Wei Liu , Dragomir Anguelov , Dumitru Erhan , Christian Szegedy , Scott Reed, Cheng-Yang Fu , Alexander C. Berg "SSD: Single Shot MultiBox Detector"
8. Radišić T., Vidović A., Ivošević J., Wang B "Challenegs and Solutions for Urban UAV Operations"
9. Song Han, William Shen, Zuozhen Liu "Deep Drone: Object Detection and Tracking for Smart Drones on Embedded System"
10. Jangwon Lee, Jingya Wang, David Crandall, Selma Sabanovi˘c and Geoffrey Fox, "Real-Time Object Detection for Unmanned Aerial Vehicles based on Cloud-based Convolutional Neural Networks"
11. Jonathan Huang, Vivek Rathod, Chen Sun, Menglong Zhu, Anoop Korattikara, Alireza Fathi, Ian Fischer, Zbigniew Wojna, Yang Song, Sergio Guadarrama, Kevin Murphy, "Speed/accuracy trade-offs for modern convolutional object detectors"

e ISSN 2348 –1269, Print ISSN 2349-5138
Marathwada Mitra Mandal, Pune

Electric vehicle using renewable sources

1stGauravSonawane, 2nd Hitesh Bachhav, 3rdKundanPatil, 4th Prof. M. R. Pangaonkar
E & TC Department,
Marathwada Mitra Mandal's College of Engineering,
Pune, India

ABSTRACT: *On the basis of renewable sources, we are designing vehicle-based on solar and wind energy sources. The solar energy is stored in a rechargeable battery for providing energy to the battery of a vehicle. While discharging the vehicle battery, the battery level indicator indicates to charge the battery and it can be charged from the nearby charging station. The wind energy can be stored by the mechanism of the prototype design of the turbine. It is designed by rotation of DC motor which can store energy. Solar and wind energy are the main renewable sources for our vehicle designing system. This design can minimize problems due to fuel and electricity consumption. There is no need to charge battery with electricity it charged through solar panel and turbine mechanism. We are using the GPS connection for detecting the location of the vehicle.*

Keywords: *Energy storage, Node MCU, Electrical Vehicle (EV), Rechargeable battery, Wind energy, Solar energy, Smart city, Mobility*

1. Introduction

Now a days the fuel rate is above 90rs/li. Due to the fuel engines, pollution is increases day by day. In daily routine, public transport is very important but as we see the fuel rate, some people avoid the use of bikes or cars. A few years ago Elon Musk launched a new concept in the industry. The concept is to used electricity instead of the fuel in cars or bikes many problems can be solved. This concept was implemented in the Tesla Group of Industries [8]. The Battery of Tesla car charge on Electricity but as we know the Electricity must be reserved for the Future. The electric power system of EV's imitated to compare with cost and emission of electricity of conventional power system [5].If we have a natural source of energy as like Solar, Wind. Then we need to avoid electricity as much as possible. Hence on the basis of today's fuel consumption problem we have a solution is storing energy into the Battery using solar and wind energy. We used this energy in our regular domestic appliances instead of Electricity. We overcome this electricity problem. We have considered that energy supplies from renewable sources are time variant and it may be unpredictable[7]. We aresaving the energy using renewable sources through a battery charger and store it in the battery. If the vehicle battery is high/ low battery level indicator indicate it on the vehicle. Solar and wind energy are the main sources for our designing application. Many applications can be designed using solar energy and wind energy, the vehicle will be charged through these sources charging station[1][5]. For wind energy, we are designing the mechanism of a turbine using rotation of the motor. The rotation of the motor is used for the energy storing system. This stored energy is utilized for the smart city[2].

II. Literature Survey

The literature survey presents an overview of the EV's system using renewable sources [4]. The journals were analyzed and content is presented. After analyzing what systems have been in the published in the journals, we presented our ideas which were focused on improving the existing system.

Table no. 1: Literature Survey

Sr. No.	Author	Year	Topic
1	Dr. Ebert Etal [1]	2009	Mobility based on Mobility
2	Peng Yen Liew [2]	Jun-14	Optimal renewable energy system for smart cities.
3	Cheng K.W.E [3]	09 Feb. 2017	Energy management System for mobility and smart city
4	Michela Longo [4]	05 Nov. 2018	Electric vehicles integrated with renewable energy resources for sustainable mobility

Table no 2: Selling of Electric Vehicles (Globally)

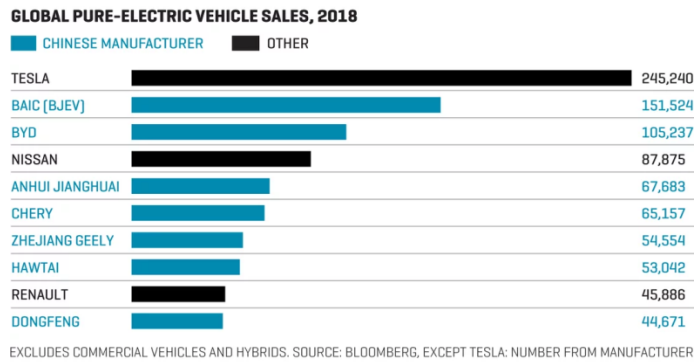

This analysis shows that the various manufacturing companies and their selling of electric vehicles. Tesla lead as compares to others [10].

III. Block Diagram

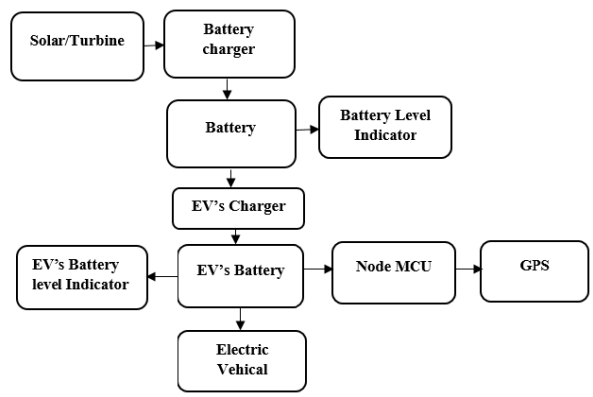

Fig. 1 Basic Block Diagram of EV's System Using Renewable Sources

Operation
Power Station
In our system energy taken from the solar panel & Wind turbine which is approx. 20-25v DC. But the energy storage device needs 12v DC to store the energy. So we decrease the energy which is coming from the Solar panel & Wind Turbine to the battery level. For that, we used a DC-DC converter to convert fluctuated 20-25 DC voltage to fixed 12v DC supply. The diode used for blocking reverse voltage from the battery source.
In this way, we store the energy but How many energy is stored? For that, we use the battery level indicator which indicates how many energy stored in the battery.

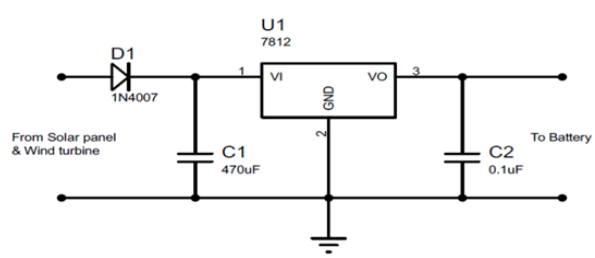

Fig 2.Power Station Battery Charger

e ISSN 2348 –1269, Print ISSN 2349-5138
Marathwada Mitra Mandal, Pune

Electric Vehicle

The EV's charger is used to charge the battery of the vehicle. The power station supplies 12v DC supply, but we need only 5v supply to charge the battery [7]. So the battery charger converts the 12v DC supply to the 5v supply. Energy stored battery at EV is used for a drive the vehicle and also used by Node MCU and GPS. Node MCU is work as a controller for the system. GPS is connected to the controller for the live tracking of the vehicle. The live location of the vehicle is uploaded to the cloud which is accessed by the user to track the vehicle.

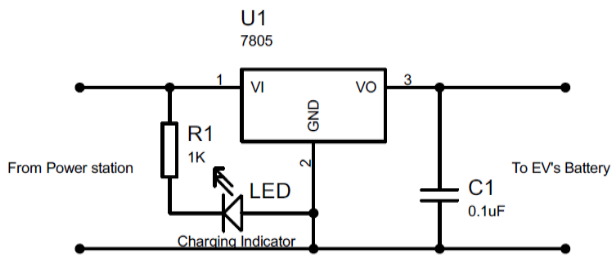

Fig. 3. EV'S Battery Charger

III. Hardware Description

Solar panel

For the generation of electricity, we are using a solar panel which absorbs sunlight. The solar charging system is not complete without a charging system [6]. The energy provided by the Solar Panel which converts the voltage so it will be suitable for battery charging. The supply voltage for charge the 12v battery bank we need about 16v supply from the panel. This allows charging Li-ion to 12.60 (3 x 4.20v per cell). 4.20v per cell for lithium-ion is the fully-charge voltage threshold.

Turbine

In this prototype, we are using a dc motor instead of a turbine for generating wind power[6]. The voltage output is proportional to its rpm. The dc motor generates 20-25v as depends on the flow of wind, but as per requirement, we are using 12-15v (using battery charger) for charging Li-ion battery. That voltage can be sufficient for charge fully battery. The battery charge near about 10mv/s and fully charged in 20-25min if battery charger gives a 12v/s.

Node MCU

In this project, node MCU is interfaced with the GPS device. With the help of node MCU, we can upload live vehicle tracking data to the cloud that can be an IOT based. The user can track the vehicle location from this data.

Table no. 1: Comparison between Arduino UNO R3 and Node MCU

Arduino UNO R3	Node MCU
Microcontroller ATmega328 is used in Arduino.	Microcontroller ESP8266 is used in in Node MCU.
Upto 14 GPIO are used in Arduino.	Upto 16 GPIO are used in Node MCU.
Arduino needed 5v power supply.	Node MCU needed 3.3v power supply.
External wi-fi module required.	Inbuilt wi-fi module.
It is large in size.	Compact board size.
Programming can be difficult than Node MCU.	Programming can be easy.
It is costly than Node MCU.	It is cheap in cost as compare to Arduino.

Battery level Indicator

Power Station

As per the voltage level, the particular LED will be glow which indicates the voltage level of the battery. The last green LED glows when the battery voltage is up to 12.6v and only the RED LED glows when the battery level goes below 9v.

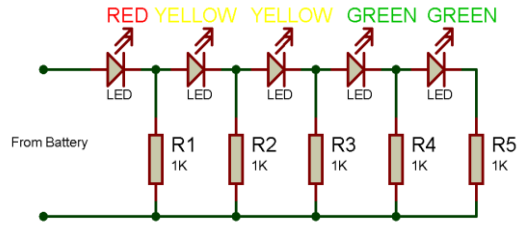

Fig.4. Battery Level Indicator At Power Station

- **Electric Vehicle**

To indicate the battery level of electric vehicle, we need a battery level indicator. It is similar to the indicator at the power station. However, the voltage ratings at vehicle system are different. The Green LED glows when the voltage of vehicle battery is above 7v and Red LED glows when battery level goes bellow 5v.

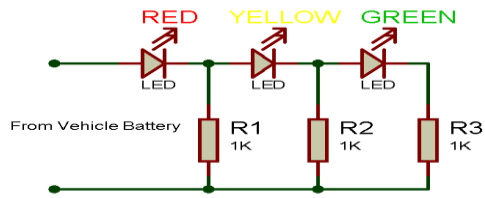

Fig. 5: Battery Level Indicator at EV's

IV. Flow Chart

In the flow chart as seen, the energy storage device store the energy through the charger unit. The battery level indicator indicates the level of energy stored in the battery. Power station is used to charge the vehicle battery through the vehicle charger. There is also the battery level indicator which indicates the battery level of the vehicle.

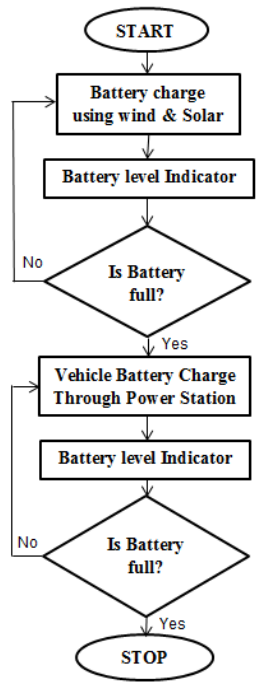

Fig. 6: Flowchart

e ISSN 2348 –1269, Print ISSN 2349-5138
Marathwada Mitra Mandal, Pune

V. Advantages

3. Stored energy is used for domestic and residential purpose.
4. Fuel consumption reduces.
5. Minimize the use of electricity.

VI. Conclusion

The energy from various renewable sources like solar and wind are stored and it is utilized for mobility. The rechargeable battery is used to store this energy from renewable sources. This stored energy utilized in EV's that minimize the use of fuel and also saves electricity. This also helps to reduce pollution related issues. In addition to this system, it also track the vehicle location by using GPS. The stored energy is also be utilized forsmart city projects like Street light, Traffic signals, Digital signage, Smart bus stops, Metro rail etc.

VII. References

1. Raunhofer ISE Dr.Günther Ebert (Future mobility based on renewable energies) FVEE, AEE Topics 2009,(guenther.ebert@ ise.fraunhofer.de).
2. J. Villar, C.F.Calvillo, A. Sánchez-Miralles, ("Energy management and planning in smart cities"), ICAI School ofEngineering, Comillas Pontifical University, Spain.
3. Bangladesh NusratChowdhury 1, ChowdhuryAkramHossain 2, Michela Longo 3 and WahibaYaïci 4,*(Optimization of Solar Energy System for the Electric Vehicle), Published at University Campus in Dhaka,(14 September 2018).
4. CiprianVlad ; Mihai Adrian Băncilă ; ToaderMunteanu ; Gabriel Murariu(Using renewable energy sources for electric vehicles charging)02 December 2013
5. WeixiangShen , Xiudong Cui(Impact of electric vehicals and reneawable energy system on cost and emission of electricity) 26th November 2012 7th IEEE conference on Electronics and Application (ICEA)
6. Vaughn C. Nelson, Kenneth L. Starcher "Introduction to Renewable Energy" 2nd Edition.
7. CiprianVlad ; Mihai Adrian Băncilă ; ToaderMunteanu ; Gabriel Murariu(Using renewable energy sources for electric vehicles charging) 02 December 2013 4th International Symposium on Electrical and electronics engineering [ISEEE].
8. M.EjasAhamed, R.Ramya, K.Indirajith(Pulse Charging Method for Electric Vehicles and Renewable Energy Applications) International Journal of Emerging Technologies in Engineering Research (IJETER) Volume 4, Issue 8, August (2016)
9. https://www.tesla.com/supercharger
10. http://fortune.com/2019/03/22/electric-car-showdown-china/

ASTRO: An Old Age Assistant Bot With Fitness Band

Astha Mattoo, Sakshi Kulkarn, Siddesh Mandhare, Prof. Harshada Burande
Professor,
Department of Development Studies,
University of Dhaka Bangladesh, Bangladesh.

ABSTRACT: *With the changing lifestyles the youth is adapting with it, however the senior citizens have to face many issues as a consequence of this socio-technological transformation. In modern times both the elders in house are working, the children have an even busier schedule which results in most of the elders living alone. And to top it all, technology is taking over most of our lives, not being able to accustom to it makes their day to day tasks complex. Unfortunately, sometimes children are unable to come on time when their parents fall sick. World have became so complex and busy therefore don't bother for their health. The project aims at autonomously monitoring the health of the person, to reduce any casualities due to unattended help during emergency and to form a companion who overcomes the boredom of elder people living alone. The project consists of an interactive bot and a fitness band. Fitness Band can sense heart rate , oxygen level and body temperature. The data is then fetched and sent to main interactive bot which sends the alert to emergency contact whenever in need.*

Keywords: *Arduino Nano, Fitness Band, Bluetooth Module, Heart rate, Temperature, Internet of Things(IoT), Raspberyy pi , interactive bot, GSM.*

1. Introduction

In this century, the importance of Interactive bots is increasing more than mechanical bots. Assistant bots can be fun friend as well as helpful assistant with serious technology inside. In this world where everyone is running towards their goal, they don't have time for themselves & health has taken a backseat. In times like this, automatic health monitoring should become a priority in terms of technological advancement. This will help every individual in monitoring the health without spending extra time on it.

In Every family nowadays. both the adults are working, which means the elderly people are left unattended or in some cases at an old age home. This isolation causes loneliness & it can result in life-threatening diseases. Alzheimer's is also one of the most common & serious illness in old age, which makes a person forget basic day to day things, people they know, & even about themselves. They also forget taking their daily medicines, which can escalate the illness. Reminding them about all this can help them go through Alzimer's with less difficulty.

The project aims at creating easy life for elders. It is aimed to reduce casualties due to unattended medical help during emergency. Therefore, health will be regularly monitored by fitness band. If emergency conditions arise, it will send alert to Raspberry-Pi using Bluetooth Module or wifi. The main bot will be interactive bot. It will also remind them of important stuff, about their daily routine their lunch, dinner, medicines, which can be personalized.

Literature Survey

The need for a Robot assistant is scarce now, but with time it will increase. Humans are prone to error, but a probability of well designed 'bot' malfunctioning is relatively low. A bot should not only attain to basic need but also be intelligent enough to detect emergencies and save lives. This is what the project aimed at. The bot was well equipped with Interaction, Voice Control, Obstacle Detection and Avoidance, Personalized Routine and Medicine reminder working in sync with Fitness band. Arduino Nano interfaced with Temperature Sensor(LM35) and Heart rate Sensor (MAX 30100) was the fitness band.

Siddharth Kokalki, Akshay Mali, Pawan Mundada and Ritesh H. Sontakke , Department of Computer Science and Engineering, DKTE Society's Textile and Engineering Institute, Ichalkaranji .have published a paper on 'Smart Health Band using IoT' [5]. This paper monitors health of the user with Arduino uno, temperature and heart rate sensor and sends the data to cloud (thingspeak). On thingspeak,a graph displays sensed temperature and heart rate which is then taken on mobile application. So as the user can know temperature and pulse rate at all times. When the pulse rate changes drastically and is in critical range, a message will be send to doctor.

e ISSN 2348 –1269, Print ISSN 2349-5138
Marathwada Mitra Mandal, Pune

Nisha Sharma, ZeenatShareef and Dr. S.R.N Red, Department of Computer Science, IGDTUW, New Delhi, India have published a paper on 'Fit-Wit:Design and Development of Wearable Healthcare Device based on Intel Curie Platform [6]'. This project builds a device that is based on a platform name Intel Genuino 101 which is particularily designed for wearable healthcare technology. The projects aims at bulding a portable, small size and user friendly device with limited power usage product which is flexible with different age groups.
Muneeb Imtiaz Ahmad, Omar Mubin and Joanne Orlando published an indept research paper on 'A Systematic Review of Adaptivity in Human-Robot Interaction'[7]. This paperstudies the field of Human Robot Interface (HRI) and opens this field to all the future possibilities. It also points the research done on this field is leaning towards short term interactions and a protensive research needs to be done.
Abhay Dekate, Chaitanya Kulkarni and Rohan Killedar, Department of Computer Engineering, AISSMS College of Engineering published a paper on 'Study of Voice Controlled Personal Assistant Device[8]'. This project uses NLP and AI techniques to build a smart assistant to make life easy. The project works in three steps. Step one is collecting data in form of voice, analysing it and converting to text , the next step is storing data and processing it and the final step is to give output speech from the processed data.

Block Diagram

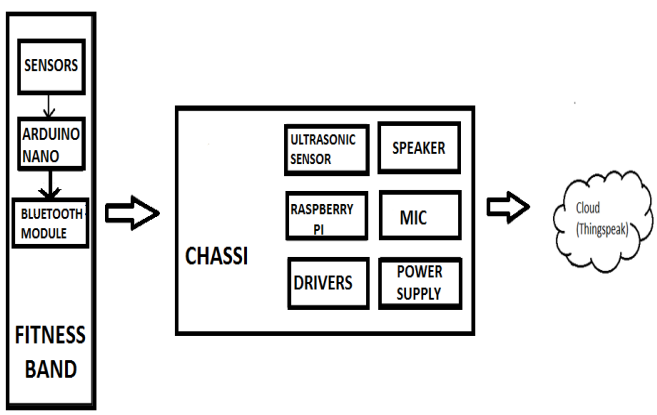

The project comprises of two main blocks. The fitness band block is embedded with many modules like sensors microcontroller and communication module. Arduino nano is a microcontroller which has two IC's namely atmega168 or atmega328 IC, has 8 analog input pins and also 14 digital I/O pins. The temperature and heart rate sensor are connected to the analog input ports of Arduino Nano. One of the sensor monitors the user's body continuously and the other one heart rate with oxygen level.
Temperature Sensor used in the project is LM35. Its operating range starts from -55°C to 150°C. For every °C rise/fall in temperature its output voltage varies by 10mV. It has three pins. It draws 60uA from supply therefore acquires low self_heating capacity. Another sensor used for monitoring heart rate is MAX30100. It is used to detect heart rate and pulse oximetry signals. It operates from 1.8V to 3.3V power supply. It is mostly used in wearable devices, fitness assistant devices and medical monitoring devices. It has integrated LED's, high-performance analog front-end and photo sensor.
This data is send to main bot i.e. raspberry pi via bluetooth. Bluetooth module is connected to Arduino Nano which sends the data digitally to raspberry pi.
For connection of the band to raspberry, the module which is used is HC 05. This module can be used as a master or slave and can be operated in such configurations. It has6 pins.To indicate connection status, it has red LED. This red LED blinks periodically continuously before connecting to HC-05 module.Its blinking slows down to 2 second,when the connection is built with any other Bluetooth device. This module works on 3.3 V but we can also connect 5V supply voltage as well as it has on-board 5 to 3.3 V regulator.
Raspberry pi will receive the data via Bluetooth and check it , if the value goes beyond the desired limit then immediate action will be taken . An alert will be sent to emergency contact . The main bot also is an interactive bot and moving bot . Speaker and Mic will help the bot for interactive purpose.
The main bot also have ultrasonic sensors for obstacle avoidance and this will also be performing voice controlled function

Working

The primary work and part of the project is fitness band . The fitness band is build from two sensors which are interfaced with arduino nano. The sensors collect the data and stores the dynamic data in arduino nano . Temperature sensor is directly connected to nano by connecting output pin of sensor to analog pin of nano. MAX30100 sensor is connected via external pull-up resisters for I2C protocol. This sensor displays oxygen level with heart rate in bpm.

After collecting the analog data signal, it is converted to digital signal by an in-built ADC in arduino nano . This digital signal is then forwarded to the main bot via Bluetooth module (HC-05). Module's transmission/ receiving pins are connected to receiving/ transmission pins of arduino nano respectively. Bluetooth module connects the fitness band to the bot wirelessly.

The main bot uses RaspberryPi as the processor. The bot is responsible for collecting the data from sensor, constantly monitoring it for irregularities which may result in emergency conditions. When bot detects such condition, it sends a message to the specified emergency contact.

The emmergency message is send using twilio . One can send outgoing messages from your own build twilio phone number to the verified phone number across the globe . There are few steps which one has to follow to program it successfully. First of all, user has to create a twilio account which will then ask the user to gain a twilio number for contact. Your account will provide the user unique authorized ID and status which helps for communicate uniquely . Provided unique numbers must be updated in a program and then go to next step.

Along with processing the data, bot is also provided with features like Voice Control, Obstacle Detection and Avoidance, Interaction and Personalized Reminders. For Interaction, the bot receives the Voice signals, converts it to text and searches for appropriate answer on google and converts this text to speech.

When User Wants to Activate the Voice Control Feature, He/She will use it's Wake up call. The user will then give pre planned instructions like 'Right, Left, Forward, Back, Stop' to navigate the bot, if at times the bot faces any obstacle through Ultrasonic sensor, it will stop and divert accordingly to get back to the original path.

The Bot is programmed to meet daily reminders for medicines, breakfast, lunch, dinner and exercise timings. It also reminds the user about the monthly/yearly checkups.

Conclusion

As it is said that 'precaution is better than cure' ,the project aims at doing just that by trying to reduce casualties. It is also targets at making elder people live a healthy life by following a schedule. Taking medicine on time will promote sustained life. The interaction part of the bot will make it a companion as well as entertainment. For elderly people who have trouble reading news, the bot will recite it to them.

Future Scope

Internet of things (IOT) is in full bloom, 'smart' is the new tech word. After Smart phones, it is now homes and cities that are going through this modification. Smart home are a part of smart city. Likewise the project as 'Smart Assistant' will be a part of the new revolution.

In this project, the bot only contacted the emergency contact in times of emergency. But when it becomes a part of Smart City, it can also notify the Nearest Ambulance and the Hospital. Thereby making it more efficient in saving lives.

As a part of smart home, it will be linked to the house. The house will have sensors all around, like gas sensor in the kitchen, proximity sensor at the gate which can be activated at night, motion detector lights, automated lights, fans, water heaters which can all be operated with the Bot.

Electricity and water should be used efficiently, smart assistant will oversee that it does not go to waste.

References

1. https://www.raspberrypi.org/downloads/raspbian/
2. https://www.twilio.com/docs/sms/tutorials/how-to-send-sms-messages-php
3. https://www.twilio.com/console
4. Mark Lutz,"Learning Python", 5th ed, Sebastopol CA O'Reilly , 2013.
5. S. A. Kokalki, A. R. Mali, P. A. Mundada and R. H. Sontakke, "Smart Health Band using IoT",presented at IEEE International Conference on Power, Control, Signals and Instrumentation Engineering (ICPCSI), 2017

e ISSN 2348 –1269, Print ISSN 2349-5138
Marathwada Mitra Mandal, Pune

6. N. Sharma, Z. Shareef and Dr. S.R.N Red, "Fit-Wit:Design and Development of Wearable Healthcare Device based on Intel Curie Platform" presented at International Conference on Computing, Communication and Automation (ICCCA), 2017
7. A. Dekate, C. Kulkarni andR. Killedar (2016, December). Study of Voice Controlled Personal Assistant Device. International Journal of Computer Trends and Technology (IJCTT). 42(1). pp. 2231-2803. Available: http://www.ijcttjournal.org
8. Muneeb Imtiaz Ahmad , Omar Mubin and Joanne Orlando (july 2017) A Systematic Review of Adaptivity in Human-Robot Interaction.

Smart Intelligent Two Axis Robotic Simulator

Aishwarya Lande, Akshay Havaldar, Shiwani Fuse
Department of Electronics & Tele Communication Engineering,
MMCOE, Karvenagar, Pune, India

ABSTRACT: *The prototype is about simulation of artillery system which can help to lay the system Remotely with high accuracy and consistency. Various electronics modules are used to operate the artillery gun remotely without any manual intervention. It will help to hit the target very accurately as it simulates Various angles of elevation and azimuth. The project is about inspection of Artillery system using Arduino uno, Bluetooth module, various sensors and motors. System Simulates elevation and traversing of gun barrel with the help of Bluetooth module using android application. By simulating various sensors and motors we get gun fire at a particular set point.*

Keywords: *Arduino Uno, Bluetooth Module, Temperature, Fuel level, Steering Adjust, Acceleration Pedal.*

1. Introduction

Artillery system are designed to provide fire support for armor (the metal coverings formerly worn to protect the body in battle) and infantry forces by firing equipment (military weapon) at greater distances than small arms and light weapons. In this prototype, the term artillery weapon system is used to refer specifically to be able to move without external support, towed (motor vehicle or boat), and placing guns (i.e. not man-portable) of a caliber greater which are designed for indirect fire and having the ability of hitting targets at a considerable range. Artillery weapons typically operate as a unit, or 'battery', and are intended to deliver a simultaneous discharge of artillery (or other guns at battle) fire against an area target. Artillery weapons can either be towed or able to move without external support, and can be armored or unarmored. Modern artillery are intended to deliver a simultaneous discharge of artillery (or other guns at battle) fire against an area target. Artillery weapons can either be dragged or able to move. It is **the** prot**ot**ype of artillery system which can help to lay the system remotely with high accuracy and consistency. Various electronics modules have been used to simulates various angles of elevation and azimuth. The project is about inspection of Artillery system using Arduino uno, Bluetooth module, various sensors and motors. System Simulates elevation and traversing of gun barrel with the help of Bluetooth module using android application. By simulating various sensors and motors we get gun fire at a particular set point.
main results

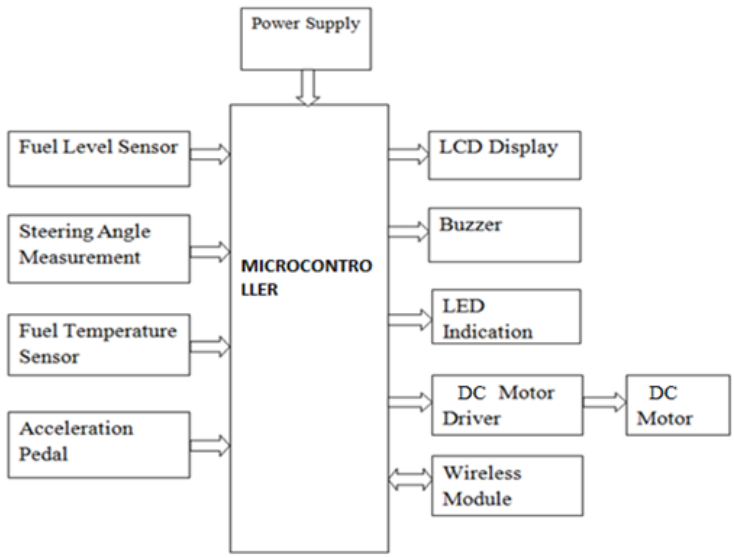

Fig no.1: Block Diagram

e ISSN 2348 –1269, Print ISSN 2349-5138
Marathwada Mitra Mandal, Pune

The transformer, rectifier, regulator are used as a power supply to the circuit. Sensors will detect the fuel level, temperature of system. DC motors are used for pan and tilt operation. Drivers are used for the connection of various DC motors to arduino. Arduino was used for interfacing as controller.

We have used arduino uno as controller in the system. Gun laying (setting) is the process of pointing an artillery object, a gun, horizontally or vertically, on land surface or at sea, or space targets. Gun laying concept is used in this system for two operations that is for elevation and traverse Gun deploy moving of the axis of the drill of the barrel in two planes. Elevation is used for the moving the barrel in vertical plane to raising or being raised at high level means to “upgraded" (moved in the vertical plane of the surface) to range it to the target.

And Travers is used to rotate it into horizontal plane to pass over means "derived" (rotated in a horizontal plane) to align it with the target. Arduino Uno consists of 14 digital input and output pins including 6 can be used as PWM outputs, 6 analog inputs, a 16 MHz crystal oscillator, an USB connection as a power jack, an ICSP header, and also a reset button.

Ultrasonic sensor is used for detection of oil (fuel) level. It is a device that measures the distance to gadget or device using ultrasonic sound waves. High-frequency sound waves returns (reflect) from frontier to produce clear echo patterns.

For fuel temperature MCP9700 is used. It is a sensor with output voltage is directly corresponding to measured temperature. The MCP9700 can correctly (precisely) measures temperature from -40°C to +150°C. The output of the MCP9700 is fixed on (determined) to a slope of 10mV/°C and has a DC offset (counter balance) of 500mV. The offset (counter balance) allows reading negative temperatures without the need for a negative supply.

16x2 LCD display is used for displaying the result outcome of the system. Operating voltage is around (throughout) 4.7V to 5.3V. It has two rows and every row display 16 characters

A motor-driven and controlled of power steering structure includes a steering column (upright) connected to a steering wheel, a motor with a rotation rod (shaft) connected to the steering vertically, a decelerator that rotates by linking (interacting) with the rotation rod (shaft), fixing parts placed at every left and right wheel, connected members rotatable connected at both the ends to the interconnect the chunk or part and slow down, a detecting part that detects the vehicle position, and a motor driving and controlling device that generates a steering guide force by affording the motor with a current fixed on the basis of the vehicle state or position.

This framework or structure transmits the controlling force of the motor directly to vehicle wheels, so that boosting (optimizing) the motor function and reducing the vehicle weight by completely removing a bunker or frame.

A motor-driven steering system, incorporating: a steering column vertically linked to a steering wheel; a motor with a circular motion (rotation) rod (shaft) connected to the steering (operating a rudder) column; to reduce that rotates by dealing and linking with the rotation shaft; a left fixing part arrange placed at a left wheel; a right fixing part arranged at a right wheel; a left link member rotatable connecting and linking to reduce the left fixing part; a right link member gyrate connecting to reduce the right fixing part; a detecting part for detecting a vehicle state; and motor driving means for generating steering accommodate force by operating the motor, which is supplied with a current fixed on the foundation of the vehicle state detected from the detecting part; wherein one fixing part is disposed at a front of one wheel and the other fixing part is disposed at a backend of the other wheel in relation to rotation center points of the wheels, one by one and connecting points of the decelerator and link or connecting point member are positioned mirror like on the diameter of the decelerator.

DC motor is used to set angle adjustment of gun barrel. It is 12V motor with 30rpm. Current consumption of DC motor is high which is insufficient for the controller to provide. To overcome this drawback DC motor driver IC is used. It is used to drive the DC motors.

Wireless module such as Bluetooth module is used operates the system remotely. HC-05 FC-114 Bluetooth module is used in this system. Operating voltage is 0.5v. Operating frequency is 2.4 GHz. the range of this module is around 10m. The system also operates remotely through smartphone by communicating through Bluetooth. The module is used for controlling the barrel by means of ladder of range 0 to 5 points with respect to 0 to 180 degree. Using Bluetooth module and application Bluetooth terminal the angle of elevation and traverse is adjusted in particular angle. Accelerated pedal are simulated using analog input to microcontroller. Accelerated pedal was simulated 0 to 5 voltages as correspondence to 0 to 100 percentage of output. For steering angle simulation we are mapping 0 to 5 voltage corresponding 0 to 360 degree of

angle simulation. Where as the prototype results in angle adjustment of barrel using elevation and traverse with help of wireless control through Bluetooth and android application. Also prototype results in measurement of various parameters like temperature, oil or fuel level detection etc. and at last control of recoil action.

Circuit diagram

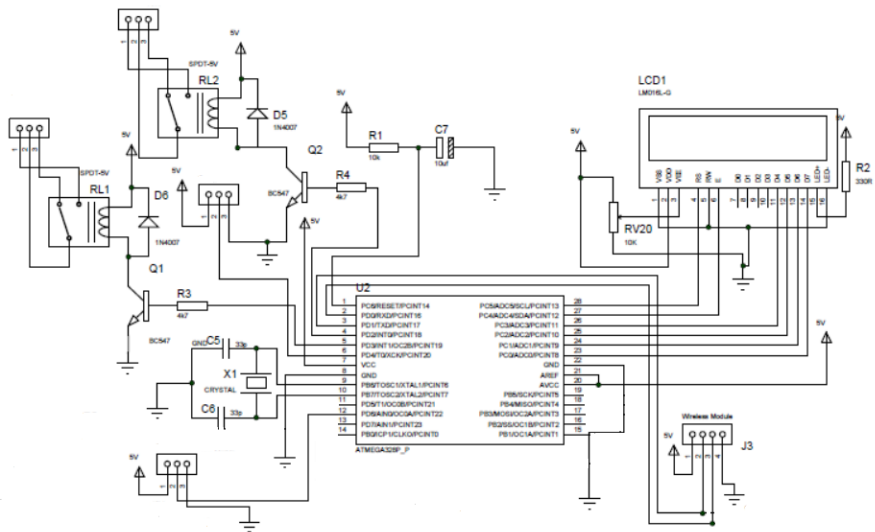

Fig No. 2: Hardware design

Over all Specifications of Project:

Weight	12000kg
Length	52 Caliber 8060 mm
Barrel length	6975 mm
Crew	6-8
Caliber	155 mm
Breech	Screw type
Recoil	Electro-rheological/Magneto-rheological
Elevation	-3 to 70 degree
Traverse	+/-25
Rate of fire	Burst:3rounds in 15sec Intense:15rounds in 3min support:30 rounds in 60 min
Effectual firing range	40 km
Maximal firing range	48. 074 km (Using HE-BB or High Explosive Base Bleed ammunitions)
Vision	Thermal vision. Gunners

Algorithm

1. Start
2. Initialize LCD display, wireless module sensors.
3. Display Project Name.
4. If output of Steering Encoder Simulator is identified then display steering output on LCD display.
5. If Temperature Sensor output is identified then display temperature on LCD display.
6. If fuel level output is identified then display fuel level on LCD display.
7. If key1 is pressed using wireless module through smartphone then rotate DC motor 1 accordingly.
8. If key2 is pressed using wireless module through smartphone then rotate DC motor 2 accordingly.
9. Go to step 4.

e ISSN 2348 –1269, Print ISSN 2349-5138
Marathwada Mitra Mandal, Pune

Conclusion

We have implemented a demo of a system which is accurate in angle adjustment and gun automation. We also monitored the system and controlled the system wirelessly. System also monitors the fuel level and fuel temperatures. And all the system is interfaced by using microcontroller.

Future Scope

Achieving accuracy in long distance of firing range.

Acknowledgment

Ability and ambition solitary are not enough for success. Many people have failed to achieve anything worthwhile because of lack of guidance and direction. Positive result of any work hinge greatly on the support, guidance and encouragement received from the guide. We are fortunate to have more than one pillar of strength in our humble effort to make this project successful. It gives us great delight to express our deep of perception, gratitude to our college project guide Mrs. Rajeshwari Malekar for her resourceful and able guidance which lead to timely completion of project. It was really her insight and obsession for innovative ideas that motivated us to consider our idea seriously. We managed to learn quite few things from her which will definitely help in the future. We sincerely thank her for this kind co-operation and extreme patience that she has shown. They are the teachers who stayed by our side from the incorporation of necessary features into the project to the final documentation part. We feel obliged for the amount of faith and confidence they showed in us and it was their presence that kept us going on. We are very thankful to Prof. Mrs. P. S. Sawant, Head E&TC dept for providing all the necessary facilities and support. We also like to thank the entire teaching and nonteaching staff of E&TC department, who extended their kind co-operation. Last but not the least; we also like to thank our family and friends for their constant support.

References

1. www.opencv.org
2. www.microchip.com
3. https://defenceupdate.in › News
4. https://timesofindia.indiatimes.com/city/pune/...artillery-gun...test
5. https://circuitdigest.com/arduino-projects
6. https://www.elprocus.com/sensor-based-electronics-projects/
7. www.wikipedia.org
8. www.datasheets4u.com
9. www.DRDO
10. www.Advanced Towed Artillery Gun System
11. Opensource.org, “www.alldatasheet4u.com,” 2011.

IOT based Wizard Chessboard

Yashraj Hawle, Aishwarya Zade, Bharat Dixit, Prof. Shubhangi Joshi
Marathwada Mitra Mandal's College of Engineering,
Pune, India

ABSTRACT: *In this trending era of IOT where any device or node could be connected to internet, the scope of the following technology is stupendous. What if instead a device, it could be implemented in a vintage game like Chess? An IOT based Chessboard which can communicate with each other over cloud streaming is the aim of this project where the chess players could actually study their game as their moves would be uploaded online. Here two chessboards would be online and play against each other. The pieces were color coded, which is how you know where an opponent pieces were placed on the board. Professional chess players would never recommend a 5MB android application or a traditional computer chess game and would always go with the actual board game. This would enable them to play chess with the other player who could be in any part of the world connected to internet.*

Keywords: *IOT, Node MCU(ESP8266), Reed Switches (WS2812), Shift Register(74HC165), RGB LED, LCD.*

1. Introduction

Chess is a board game where we deal with 16 pieces, most powerful being the queen and least powerful being the pawns. IOT is a trending idea nowadays, so it is our job to make most of it. This project gives a practical explanation of IOT in a productive manner by using well known vintage game that is chess itself. This project is called 'Wizard Chessboard' or 'IOT based Chessboard' which comprises of cloud based communication between two chess boards and implementing a old game like chess as a modern outcome. This indeed is the best demonstration of IOT and embedded systems.

Each block has a Reed switch and RGB LED under it. Every block light up independently with the help of reed switch where it senses the magnetic pieces. 8 Reed switches of each row were connected to 8 shift registers. The 9th shift register being used for inputs from front panel switches. 9 PISO (Parallel In Serial Out) shift registers are used per board in which 8 shift registers are connected in array. The pieces are color coded, which is how you know where your opponent pieces are on the board. To make it easier to remember the color codes, there is a panel notifying the respective colors of pieces provided at the bottom of the board, for example (White for pawns, Yellow for Queen, Violet for King).

There are two such boards connected to each other over a cloud, streaming the moves on both sides. Thing Speak is the platform used here for streaming the data. The chess players on both the sides can study this streamed data (ex. Time taken for a move) to improve their game strategies.

Components Description

- **Reed Switch**

Reed switch as shown in Fig 1 is an electrical switch which operates on applied magnetic field which in this case are the chess pieces, it acts an input to the shift register or 8x8 matrix. These are placed under 64 blocks per board.

Fig 1. Reed Switch

- **Node MCU**

As this project demands a Wi-Fi connection along with embedded working, Raspberry Pi being a better option turned out to be costlier as it needed to be on both the boards at same time. Same went with a Arduino controller with Wi-Fi module attached externally. Node MCU as shown in Fig 2, being compact and cost-friendly was any time a better option for this project. Having a dedicated Wi-Fi module, it could stream

e ISSN 2348 –1269, Print ISSN 2349-5138
Marathwada Mitra Mandal, Pune

data on both the sides hassle – free and sense the reed switch inputs, actuating the RGB modules simultaneously.
It also features a 128KB memory, which could further be implemented to store the data at the Chessboard itself.
Arduino IDE was being used for programming the controller. It works on a 3.3V supply

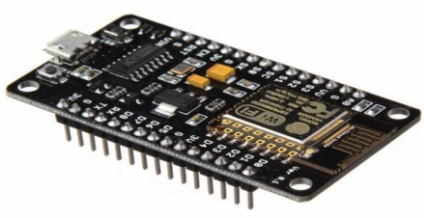

Fig 2. Node MCU(ESP8266-12E)

- **Shift Register**

Node MCU fell short of inputs for this project having only 8 inputs and required inputs were more than 64 at a time. Thus, Shift Register came into picture which had a Parallel in Serial Out mechanism. As shown in Fig 3, Shift Register(74HC165N) was used for this configuration. Reed switches connected in 8 rows were given as inputs to 8 such shift registers. These 8 shift registers were connected in serial manner forming 8x8 matrix of the 64 blocks. This configuration connected 64 reed switches occupying lesser number of data pins.

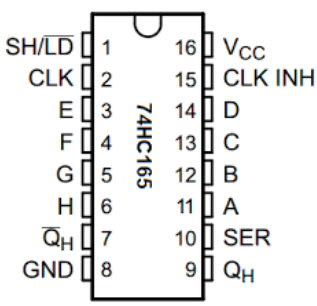

Fig 3. 74HC165N Shift Register (PISO)

- **WS2812 RGB Module**

Being the vital component of the project, it was very easy to operate as it had a single PWM signal to control the lighting of the module. If considered an ordinary RGB module, it had 3 inputs for Red, Green and Blue color generation along with a common ground. Such 64 modules being used at the same time required 64x3 inputs at a time. Hence, WS2812 module which had just one input (PWM) was preferable any time requiring just 64x1 inputs at a time. The following model was used on both the sides. It was connected in series with each other forming a strip of 64 RGB LEDs being controlled serially by just one controller pin. As shown in Fig 4, it consisted of 6 pins, where VCC, Ground and Data pin were provided on both sides. It was externally powered by a 5V,1A supply as the controller could not source such high current.

Fig 4. WS2811/2 RGB Module

- **LCD Display**

Along with the glowing of the blocks, LCD display was used to indicate the players on the both the sides about their turns in a 16x2 display format to avoid confusion. The LCD module is shown in the Fig 5 below. As the board featured additional controls like Castling, the glowing mechanism was not enough to communicate this to the opposite player, hence, LCD module was used to convey this on the other node. A single pin from controller was used to transmit the data serially to the LCD module. The fact that controller was falling short of data pins, such connections were made.

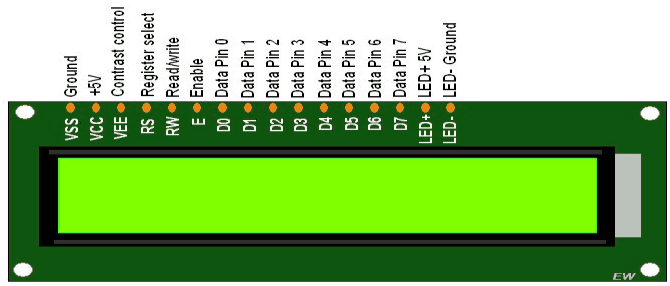

Fig 5. 16x2 LCD Module

Literature Survey

[1] In order to implement remote chessboard, 'Square Off' implemented it using a robotic arm mechanism where a player can play against an opponent at any remote location or has an option of playing against the computer itself. The in-built mechanism offers ten different difficulty levels for the players in this case. It features an android application for player statistics to be analyzed and the mode to be selected.

[2] "Low Cost Electronic Chess Set for Chess Tournament", Nasrul Humaimi Mahmood, Che Ku Mohd Salahuddin Che Ku Long, Ismati Abd Ghani, Rubita Sudirman, Malaysia.

This project is developed especially for tournaments. So that players can study and analyse their game. Here, PIC18F452 is used as a controller. Controller and serial interface gets input from sensors. For operating Reed switch, they have placed magnets under every piece so that magnetic field could be developed. Each piece in every row is connected with data select of mux 8:1(74LS251) and output of the same is forward given to the microcontroller (PIC18F452). For detecting moves od each piece reed switch is required, therefore 64 reed switches that is 64 inputs given to microcontroller. For reducing tne no. of inputs they have used 8 select lines of multiplexer. After opening the program, com port should be selected, by this board gets connected to computer. After starting the game, moves of each player appears on screen history.

[4] "T^3: Connected Chess Boards" by Sarah AL-Multlaq published on 2nd August 2016

Here, they have used SparkFun Thing Dev Board which is connected to wifi. WS2812 LED and Reed switch is placed under each block in both the boards so that each piece can lit independently. 9 shift-in registers were used in a single board to read all reed switches. Shift registers can be cascaded. WS2812 RGB LED module is used because in this only one connection is sufficient to run all the 8 blocks which are cascaded. LCD is used for displaying every moves of the player. Board is itched in 8x8 blocks. Neodymium magnets were used attached under every piece so the magnetic field generated can trigger reed switch to lit. Code was written as each piece denoted by some colour code. Wherever the piece moves particular colour will lit at that place. When player plays its move, 5 seconds span is given to send data so within this span player can change their move.

[5] "Wooden Chessboard with piece recognition by MaxChess" has given the Arduino & Raspberry pi based chess computer. Here reed switches are used for recognition of positions of pieces and LED for indicating the moves. The Stockfish Chess Engine is used where the controlling part of board is done by Arduino and Chess engine is runned by Raspberry PI. Here, Stockfish chess engine is used because of its robust nature. As Arduino is not capable to run this chess engine, they have used Raspberry PI to run the Stockfish Chess Engine. In this game player also has the hint option if he is stucked.

[6] "74HC165 8 bit Parallel in/Serial out Shift Register"

For no. of inputs we were in a need of IC which could expand input pins. This was possible by 74HC165 PISO register. Mainly this register is used for cascading purpose.

e ISSN 2348 –1269, Print ISSN 2349-5138
Marathwada Mitra Mandal, Pune

This has 8 input pins, 2 output pins, and 3 control pins which are parallel load input (PL), clock input (CP) and clock enable input (CE).

Implementation

Fig 6. Internal circuitry at both nodes

The internal circuitry consisted of Reed switches, RGB modules, Shift Registers and Node MCU along with 16x2 LCD display.
Assuming both the boards in ready state for the game, when a piece on the first board was lifted and placed on other block, the working is divided into 3 parts.

The Sending Node, Cloud mechanism, The Receiving Node.

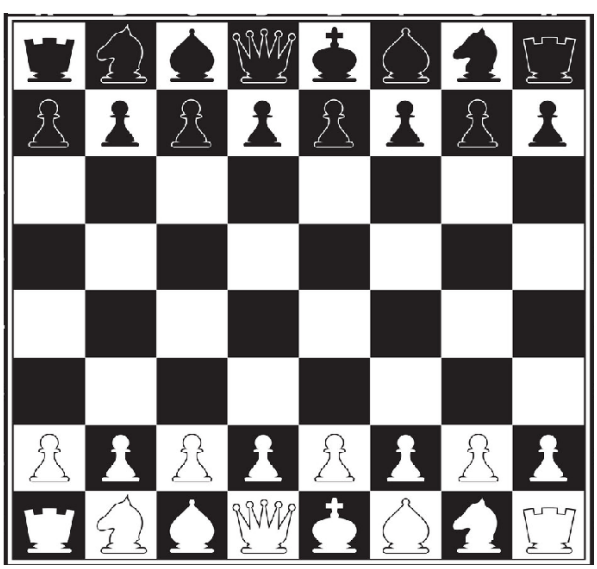

- **The Sending Node**

1. When the piece is lifted at one block, the magnetic field changes for reed switch as there is a piece of magnet attached below every piece.
2. Such 8 reed switches are connected to a single shift register, where 8 such shift registers are cascaded. Hence, these shift registers being serially connected to controller gives the matrix displacement corresponding to that piece.
3. Thus, the daisy chained RGB modules are lit accordingly.
4. The controller glows up the corresponding colour for that block. For example (Yellow for Queen).
5. This move is then sent to cloud by Node MCU itself.

- **The Cloud Mechanism**

1. The cloud is set up and ready to stream the data using Things Speak mechanism.
2. The move made on first board being uploaded by Node MCU is visualized using MATLAB Analysis on Things Speak.
3. This entry on cloud denotes the time of the move, or elapsed time between two moves which is analysed later as well.
4. Write and Read API keys are assigned on both the boards for Read-Write mechanism on both the nodes.
5. Thus, this move is sent to the other node.

- **The Receiving Node**

1. The controller receives this move via cloud and the exact opposite mechanism exists for this node.
2. Thus, the corresponding block is lit on the other side indicating the move the opponent's move.
3. Hence , the player would then make a move , in this case , the vice-versa operation takes place.

In the following manner, a cloud base chess game is implemented.

- **Detection mechanism**

Here is a piece of code used for demonstrating the mechanism.

```
long board Status [] = {1, 3, 5, 7, 8, 6, 4, 2,
                        9, 9, 9, 9, 9, 9, 9, 9,
                        0, 0, 0, 0, 0, 0, 0, 0,
                        0, 0, 0, 0, 0, 0, 0, 0,
                        0, 0, 0, 0, 0, 0, 0, 0,
                        0, 0, 0, 0, 0, 0, 0, 0,
                        10, 10, 10, 10, 10, 10, 10, 10,
                        11, 13, 15, 17, 18, 16, 14, 12}
```

As shown above, each and every piece is allotted a number in the code for identification of the pieces at any position. Thus, the reed switches now let us know, which piece has been displaced. Thus, the problem of detection is solved without any mathematical hassle being introduced. This simple mechanism simplifies the 'IF' cases being introduced for each piece further, simplifying the code itself.

Future Work

The mechanism of the project being based on the RGB modules, could further be implemented using a robotic arm. The sensing action being the same, the actuation would be a robotic arm moving the pieces. This would be an automatic mechanism which would completely eliminate human intervention. But it may not be a portable model, it would be bulky and maintenance would2 be high. This model would be preferable if a compact and maintenance free configuration is required. For the robotic arm, a 3-axis plotter mechanism working in 3 directions can be implanted.

The same mechanism can be implemented for Snake and Ladders, Checkers where it needs just an upgradation of existing mechanism. An application could be developed for analyzing the statistics as well.

Conclusion

This project is a combination of Internet of Things, Embedded mechanism and cloud computing. This project enables the chess players being remotely deployed in any region to be able to play with each other using cloud streaming. In developing countries like India, where Internet has become so reasonable, such projects have much wider scope.

The following project can work as a basis for implementing more board games as well.

Refrences

1. https://www.kickstarter.com/projects/infivention/square-off-worlds-smartest-chess-board-relaunched
2. "Low Cost Electronic Chess Set for Chess Tournament", Nasrul Humaimi Mahmood, Che Ku Mohd Salahuddin Che Ku Long, Ismati Abd Ghani, Rubita Sudirman, Malaysia.
3. A. Hala, "Permanent magnets using for reed switches control", *International Conf. On Applied Electronics*, pp. 51-54, 2006.

e ISSN 2348 –1269, Print ISSN 2349-5138
Marathwada Mitra Mandal, Pune

4. https://www.sparkfun.com/news/2155
5. https://www.hackster.io/Maxchess/wooden-chess-board-with-piece-recognition-872ffb
6. https://iamzxlee.wordpress.com/2014/05/13/74hc165-8-bit-parallel-inserial-out-shift-register/

Smart and Energy Efficient Power Saving System

Pooja Kad, Pratiksha Gadam, Saurabh Khotare, Prof. Sampada Tavse
Dept. of E&TC,
Marathwada Mitra Mandal College of Engineering,
Pune, India

ABSTRACT: *This paper proposesthe design and implementation of power saving system which focuses on energy monitoring and controlling. Energy monitoring and conservation has great importance due to imbalance between power generation and demand. Many times, consumers are not satisfied with electricity bills as it does not show the power consumed at device level. This system is designed by using IOT which can minimize both power consumption and human efforts. Proposed system is use for monitoring and controlling of light as well as fan which can save electricity. The advantage of this device is that we can understand the power consumed by electrical appliances and take further steps to control them anywhere in the world and thus help in energy conservation. The monitoring of energy consumption and controlling of electrical appliances is done by using Thunkable Platform.*

Keywords: *Node MCU, PIR Sensor, AD Smodule, Current Sensor, Voltage Sensor, IOT, Thunk able, Firebase.*

1. Introduction

The economy of any nation mostly depends on energy utilization in different fields of science and technologies. In developing country like India, the gap between electric supply and its requirement in terms of both capacity an energy. In India almost all the places have manual switching system for the electrical appliances like light and fan which often left ON in public places, seminar hall etc. This results in energy wastage. Energy is mostly wasted in the university classroom, street lights etc. Because 65% of the total energy is consumed by offices, street light and remaining energy is consumed by hostel, staff quarters. And this energy consumption can be reduced through various method such as use of time scheduling device for power supply, use of energy management devices based on image processing [3]. To control street light lamps remotely and its intensity according to the data received from the doppler sensor they have designed the by WSN (wireless sensor network) [4]. Home automation system is helpful for researchers and home appliances companies. Because of automation system not only human labour decreases but also it saves time and energy [5-7]. This paper aims for the monitoring the power consumed and controlling of the devices. This system is designed by using NodeMCU. Human presence is detected by PIR Sensor LDR will adjust the intensity of light
According to day light.By using mobile application, we can understand the electric power consumed at device level.

Motivation

As there is imbalance between electricity generation and its demand,energy monitoring and conservation has great importance in today's world.in the traditional lighting system lot of electricity wasted because there is human tendency to forget to switch off the lights. This energy wastage can be reduced by using automatic system designed in IOT which can reduce both power consumption and required human efforts. Anywhere in the world IOT plays an importance role because of which remotely monitoring and controlling can be easily done. Hence to minimize wastage of electricity this system uses IOT as a domain and NodeMCU to perform remotely operation anywhere in the world.

Block Diagram

e ISSN 2348 –1269, Print ISSN 2349-5138
Marathwada Mitra Mandal, Pune

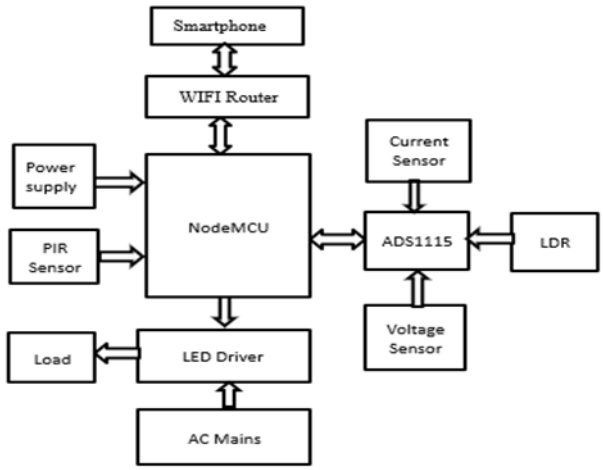

Fig 1. System Block Diagram.

Working Principle

This project has two parts, interfacing of sensor to NodeMCU and android application development. after sensing, data from PIR LDR Current Voltage sensor are send to NodeMCU and then to server which can be viewed in android application. The communication between hardware circuit and application is through WIFI module in NodeMCU and phone's WIFI.The commands are sent from phone to circuit which are checked by NodeMCU for particular operation like turning ON and turning OFF of light or fan.

Hardware Architecture

This system consists of 5 hardware components namely NodeMCU, PIR sensor, LDR, current sensor,voltage sensor, smartphone. All sensors are interfaced with NodeMCU and communication between hardware circuit and smartphone is via Wi-Fi.

5.1 Node MCU

This system uses NodeMCU (Node Microcontroller Unit) which is an open source IOT(Internet of Things) platform that is built on a chip called ESP8266. It is an important parameter of this system which is used as controller. It is an intermediate between user and appliances which has to be controlled. In this system different sensors are interfaced with NodeMCU which can access data from sensor and send it to server. We can programmed it through USB port directlyby using Arduino IDE. Like Arduino it has ability to define input/output pins and also establish wifi connection according to your needs.

Features

1. Programmable WIFI module
2. Programmed by using Arduino IDE
3. 16 GPIOs
4. 10-bit ADC channel.

WIFI Module

Establishment of wireless communication between the devices can be done through this esp8266 Wi-Fi module.

5.2 PIR (Passive Infrared Sensor)

Human presence is detected by PIR Sensor. When there is any moving body, it measures infrared rays radiating from the body. when such detection occurs, it produces output by detecting change in heat. There are various featuresof PIR sensor like we can change the detection range and also, we can set the duration for which the light should be ON etc.

Specifications

- Output - 3V.
- Static current - 50 uA.
- Fresnel Lens- Diameter 23 mm.
- Delay time - 5 Sec (default).
- Sensitivity - up to 20 feet (6 m) 110 deg *70 deg detection range.
- Supply - 5 to 12V..

5.3 Light Dependent Resistor (LDR)

LDR(Photoresistor, Photoconductive cell) is a variable resistor which is light dependant. The resistance of light dependant resistor changes according to surrounding intensity. Resistance of LDR increases with decrease in intensity and vice versa.High resistance semiconductor material is used to manufacture LDR. Resistance of LDR has value in several Megaohms during dark condition and during light condition it is in few hundred ohms.

5.4 ADS1115

ADS1115 is the analog to digital converter used for the microcontroller which has not internal analog pins. It has 4 channel 16 bit which is ananalog to digital converter. It has ability to improve measurement accuracyas well as resolution. NodeMCU has only 1 analog pin therefore this system uses ADS1115 to interface LDR, current sensor and voltage sensor.

Features

1. Supply range - 2.0-5.5V.
2. I2C interface: four pin selectable addresses.
3. 4 analog Channels 16 bits each.
4. Resolution up to 16 bits.
5. Internal oscillator.
6. Single shot mode or continuous conversion mode.

5.5 ACS712

ACS712 is also known as Hall effect-based liner current sensor IC which is fully integrated.It has low resistance current conductorand 2.1 KVRMS voltage isolation.Up to 20Acurrentcan be measured by using this sensor. This module operates on 5v supply. Because of integrated hall sensor feature it has ability to measure AC mains current in an efficient way.

Features

1. Output voltage proportional to AC or DC current
2. 80 Khz BW.
3. single supply –4.5V to 5V DC.
4. Measure current range up to 20A.
5. Sensitivity – 100mV/A.

5.6 Voltage Sensor

Voltage sensor is used to measure and monitor supply voltage. It can measure both AC and DC voltage levels. The voltage detection sensoruses the analog input of controller to monitor voltages much higher than its capacity. This module is used to measure external output voltage which is greater than maximum acceptable value that is 3.3V in case of NodeMCU. It is having 5pins out of which 2 pins are input pins and remaining 3are outputpins. Screw terminal pins are assigned as VCC and GND which has to be connected to external voltage supply which is to be measured. Basic principle of this sensor is to resist voltage divider design.

Features

1. Input supply voltage range – 0V to 25V DC.
2. Detection range – 0.02445V to 25V DC.
3. Analog voltage resolution – 0.00489V.
4. Analog Input.

e ISSN 2348 –1269, Print ISSN 2349-5138
Marathwada Mitra Mandal, Pune

6. Hardware Implementation

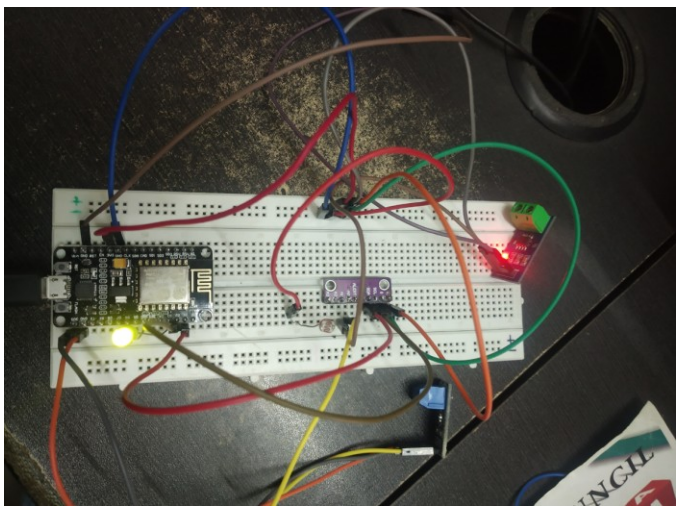

7. Application Design

7.1 Thunkable Platform

This android application is developed by using Thunkable. It is the web platform (open source) which uses block-based programming language. Thunkable is also called as drag and drop platform. User can build their own android application by using this platform without knowing Java language.Thunkable is the Cross Platform that is we can create both android and iOS application. By using this android application, appliances can beremotely monitored and controlled.

Features

1. Uses block instead of code
2. Cross Platform
3. Easy to use
4. Open source platform

It is divided into two parts:

7.1.1 Designer

Overview of application can be viewed in this designer section while developing and implementing. From extension list you can drag different sensors, extension onto the viewer like light sensor, moisture sensor, bluetooth.in this section you can add button, images, textbox etc. which is in user interface part.

7.1.2 Blocks

Programming part can be done in this section by using block-based programming language.

7.2 Firebase

Firebase is the realtime database developed by google for the high quality applications. It takes realtime data from applications and stores it in Firebase cloud. Data is continuously updated when the new data arrives. Data can be access anytime from the user by using application or browser.

Features

1. Cloud Firestore.
2. Machine Learning Kit.
3. Realtime Database.
4. Authentication.
5. Hosting.
6. Cloud Storage.
7. Cloud Functions.

8. Flow Chart

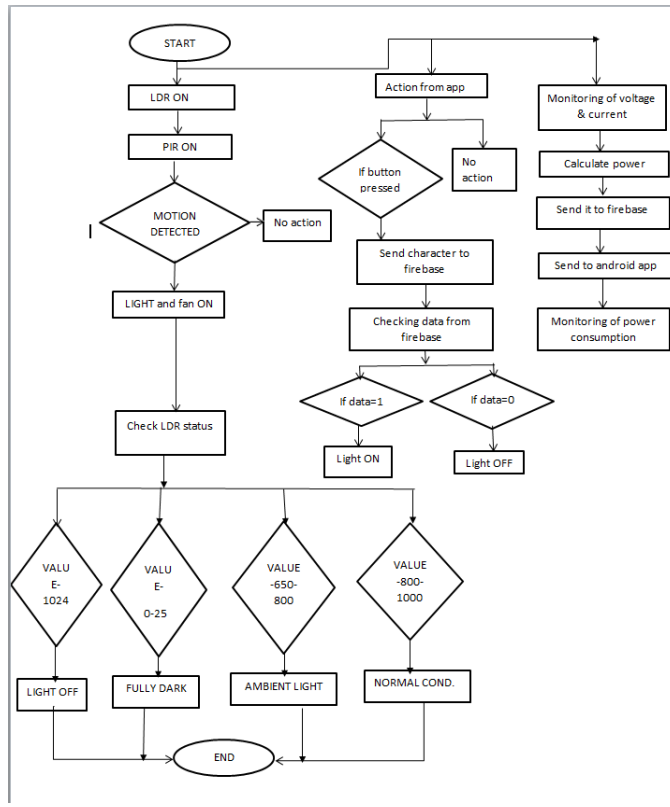

Fig 2. Flowchart

9. Algorithm

Step 1: Start the process.
Step 2: Initialize pic Microcontroller, sensors.
Step 3: Check if any human presence is there or not by using PIR sensor.
Step 4: If motion is detected then light will be turned ON.
Step 5:According to surrounding light, adjust the intensity.
Step 6:If motion is not detected then light will not be turned ON.
Step 7: Send sensor data to controller.
Step 8: Calculate the power used during operating hours.
Step 9: Monitor the power consumption on android application.
Step 10: Remotely control the home appliances.

10. Conclusion

This system provides a method to decrease the wastage of electricity and utilize them in an efficient manner. The overall system provides efficient power consumption by effective monitoring and controlling by using android application. It is more effective than traditional system as it provides automatic control over the different electronic appliances and is cost efficient. This system also reduces human efforts as it provides automatic controlling by using sensors.

11. Future Scope

1. This system can be controlled by using voice commands and had gestures.
2. Use system for many numbers of rooms to save energy on large scale.
3. It will detect any kind of unauthorized, suspicious movement and notify the user immediately.

12. References

1. Muhammad Asadullah, Khalil Ullahs, IEEE Student member "Smart Home Automation System using Bluetooth Technology" IEEE Conference paper., vol. 54, no.3, May 2017.
2. S. Prasanna, A. Logeesan, A. Raghu, R. Sabarinathan "Automated Intelligent Power Saving System and Security System," ISSN 2231 -1297, vol. 3, no. 9, pp. 1167-1176, 2013.
3. Ahmad, F. and Iqbal, S., "Reducing electricity consumption in educational institutes: A case study on Aligarh Muslim university's electricity usage scenario".
4. Monika Lakra, Prof. Suchismitachinara., "Smart and Energy Efficient Power Saving System Based on Wireless Sensor Network," National Institute of Technology, Rourkela, vol. 2, no. 3, pp. 60–69, June 2015.
5. Abhay Kumar, Neha Tiwari, "Energy Efficient Smart Home Automation System", International Journal of Scientific Engineering and Research (IJSER) ISSN: 2347-3878 Vol 3 Issue 1 January 2015
6. S. Palaniappan, N. Hariharan, N.T Kesh, V.S, "Home Automation System- A Study" International Journal of Computer applications, Vol.116, no.11, pp.11-18, Apr.2015.
7. R. A. Ramlee, M. A. Othman, M. H. Leong., "Smart Home System using android Application", International Conference of Information and Communication Technologies (ICoICT), pp.277-280, 2013.
8. S. Raghavan and G. S. Tewolde., "Cloud Based Low Cost Home Monitoring and Automation System", proceedings of the 2015 ASEE North Central Section Conference, pp.1-10, 2015.
9. B. Ghazal and K. Al-Khatib, "Smart Home Automation System for elderly, and handicapped people using XBee, International Journal of Smart Home, vol.9, n0.4, pp.203-210, April 2015.
10. ESP8266EX Datasheet Version 4.3
11. ESP8266 SDK Getting Started Guide
12. PIR Motion Sensor –HC-SR501
13. Pic16f1823
14. Current sensor AC-S712
15. ADS1115 Datasheet
16. NodeMCU Development Workshop (AgusKurniawan)

Android Application Based Smart Pet Feeder Using IOT

Gauri Narendra Bhale, Tejal Shirish Deshpande, Akash Sanjay Arve, Prof. Shubhangi A Joshi
Department of Electronics and Telecommunication,
Marathwada Mitramandal's College of Engineering,
Pune, Maharashtra, India

ABSTRACT: *Internet has nowadays is prime need of human beings for performing their day to day tasks such as making online railway reservations, bank payments, electricity bills, mobile bill payments etc. Human dependence has provoked us to link every entity around us to with internet and ease our life. Keeping in mind this domain concept we thought of an idea which can simplify manual work of pet feeding and also can provide ease to animals. In our project we are aiming to develop a food feeding system for pets which can feed them with required amount food on proper time in our absence as well. Our system inculcates a prototype in which we will understand intake of pet and as per its need feed him accordingly.*

Keywords: *Pet Feeder, IoT, Android Application.*

1. Introduction

IoT conception is emerging & popularizing with a large pace and has become vital factor of our lives. Using IoT in collaborations with different electronic devices and developing a friendly gadget is in trend. IoT has a greatest advantage in which we can operate our system from any place throughout world. Pet Feeding was a tedious job using traditional methods of pet feeding also it was completely manual so whenever the owner was not available he had to make the necessary arrangement for the pet. This was not that easy for owner as well as pets so we came up with an idea to develop a pet feeder using IoT. Automatic pet feeder a currently used in variety of regions in world but not all of them are connected to internet. Most of them are timer based or can be operated using basic modules like GSM hence have low output efficiency. Thus while developing pet feeder we thought of linking it with IoT through Android Application. A brief introduction of the system can be given as by stating important components and features regarding the system. It comprises of DC motor, load cell, relay in hardware part and we are using MIT app inventor for development of Android Application and Firebase for satisfying requirement of cloud & data analysis. The brain of the system is its controller and we used here Raspberry Pi 0 which is suitable for this purpose and also comes with latest features ensuring a good compatibility with other devices.

II. Literature Survey

1] The system developed by author of this system can be used to serve domestic purposes. It is made up of devices like Atmega8 controller, buzzer, power supply, DC motor & valves. Major drawback of system is lack of connectivity with internet.
2] Here the key component used by the author that makes the system different from other is turntable controlled with stepper motor so as to serve variety of food at a time to the pet. This system has PIC controller which is not in use now a days.
3] The idea of this system is that whenever it senses presence of pet near it, system disperses food. Here they have made use of Arduino & Wi-Fi module and other hardware components too.
4] System presented in this paper is a complete pet care system which is further divide in three segments that are a pet feeder, pet collar and a pet door. Each sub section comprises of different components as per requirements. Output of system is acquired on thing speak portal.
5] Here pet feeder and pet door system is developed by the authors on using the domain of WSN and IoT.
6] This system is combination of three systems that is pet feeder, camera and pooping pad. It works on IoT domain and is supported by Android application.
7] The basic idea behind this system is using GSM module to notify alerts to the user using SMS system. And it uses IR remote for operation.
8] This system makes use of Arduino and Node MCU for its functioning and acquires notification on application. It uses MQTT protocol as well.

e ISSN 2348 –1269, Print ISSN 2349-5138
Marathwada Mitra Mandal, Pune

III. Block Diagram

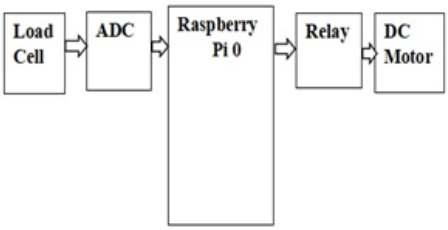

IV. Block Diagram Description

A. Load Cell- Here load cell is being used to weigh the food bowl placed on it. And sense whether it is empty or values being fed in it.

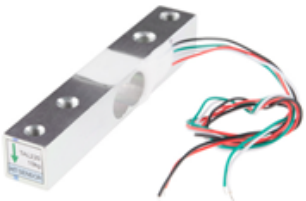

B. HX711 – In this project we are using HX711 as ADC to convert analog output received from load cell to digital form. It works on I2C protocol.

C. Raspberry Pi 0 – Every system needs a controller to operate. In this system we have made use of raspberry pi 0. It is basic controller of raspberry pi family which serves the purpose of our system. It works with Raspbian operating system.

D. Relay – Relay is used for switching purpose. Here we are using relay of for driving DC motor.

E. DC Motor- We made use of DC motor to disperse food stored in the container according to instruction given to it by raspberry pi.

V. Software Used

A. Mit App Inventor
B. Firebase
C. Python

VI. Flow Chart

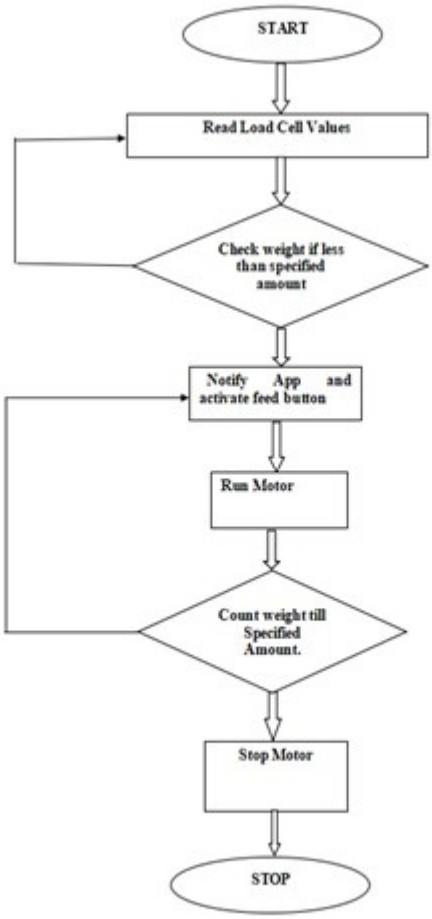

e ISSN 2348 –1269, Print ISSN 2349-5138
Marathwada Mitra Mandal, Pune

VII. Algorithm

1. Initialize the system.
2. Interpret Load Cell Values
3. Verify Weight
4. Notify on App if weight is appropriate.
5. When weight is accurate run motor.
6. As soon as weight is accurate.
7. Stop Motor.

VIII. Results

We have successfully implemented hardware and software part of this system in proper co ordination. Desired outcome is achieved by us as the system is smoothly operating using Android App. One can assure safety of application by using Log IN ID and password as shown in the figure.

IX. Advantages

A. Using feeder domestically can be too helpful to the pet owners and proper feeding timings can be ensured.
B. Cleanliness and hygiene can be maintained.
C. It is user friendly.
D. Amount of that the pet needs and at actual it consumes can be monitor and studied too.

X. Applications

A. Pet feeder can be set up in veterinary hospitals.
B. It can very beneficial to use in pet care centres.
C. It can also be widely used in zoo.
D. It can be used domestically, especially for working pet owners it is very suitable.

XI. Future Scope

The product can be used for the surveillance and the control of pets by additional features of the CCTV camera and audio speaker by which the instructions to the pets can be conveyed remotely.

XII. Conclusion

The paper describes detailed explanation of android based smart pet feeder. The use of motors and valves prove clear utilization of simple devices which can perform complex operations. All these simple devices and user friendly android application make the product very reliable and cost effective.

References

1. Automatic Pet Feeder, Manoj M, International Journal of Advances in Science Engineering and Technology, Volume- 3, Issue-3, Special Issue Sept.-2015.
2. Programmable Pet Feeder, Tessema Gelila Berhan1 , Worku Toyiba Ahemed2 , Tessema Zelalem Birhan, International Journal of Scientific Engineering and Research (IJSER) Volume 3 Issue 11, November 2015.
3. Automatic Pet Feeder Using Arduino, Mritunjay Subhashchandra Tiwari, Sahil Manoj Hawal , Nikhil Navanath Mhatre , Akshay Ramesh Bhosale,Mainak Bhaumik, International Journal of Innovative Research in Science, Engineering and Technology, Vol. 7, Issue 3, March 2018.
4. Automatic Pet Monitoring and Feeding System Using IoT S.Subaashri, M.Sowndarya , D.K.S. Sowmiyalaxmi , S.V.Sivassan, C. Rajasekaran, International Journal of ChemTech Research Vol.10 No.14,2017.
5. The Study and Application of the IoT in Pet Systems Chung-Ming Own , Haw-Yun Shin , Chen-Ya Teng Advances in Internet of Things, 2013.
6. Smart Pet Care System using Internet of Things, Seungcheon Kim, International Journal of Smart Home Vol. 10, No. 3, (2016).
7. Remote Controlled and GSM Based Automated Pet Feeder, Prashant Singh, Amit Kumar Sharma, Payal Sood, Paramdeep Singh, IJEEE, Vol. 2, Issue 2 (April, 2015).
8. Smart Dog Feeder Design Using Wireless Communication, MQTT and Android Client, Vania, Kanisius Karyono, Hargyo Tri Nugroho I. , International Conference on Computer, Control, Informatics and its Applications 2016.

e ISSN 2348 –1269, Print ISSN 2349-5138
Marathwada Mitra Mandal, Pune

Speaking System For Mute People Using Hand Gesture

Ashwini Shinde, Prajakta Karale, Riya Patel, Prof. Priya Sawant
Marathwada Mitra Mandal's College of Engineering,
Pune, India

ABSTRACT: *There are many ways of communication and one of them is vocal communication in which we can convey our thoughts, messages and information. Mute people however are not able to share their thoughts in a vocal way due to some physical disabilities. These people use sign language for communication but all people are not able to understand sign language. There are many devices which convert sign language into speech, e.g. gloves using flex sensor. The flex sensors which are situated between the fingers of the gloves will capture different hand gestures and then convert it into speech/text. This will be easy to understand for common people. Our proposed system has a camera as input for capturing the image and OpenCv python modules/software are used for processing sign language.*

Keywords: *OpenCv, Python-Idle, Text-to-Speech.*

1. Introduction

According to research, 10-15 million people are mute in India. The main problem which is to be solved is the communication problem between mute people and common people. These people cannot express their views using words, hence they face many difficulties in their daily life. To tackle this problem they have found many solutions, some of them are using hand written notes, interpreter for conveying their message, etc.

As compared to sign language written mode of communication is more convenient for the common people. Therefore speech to text converter module is developed. The main aim is to overcome the communication barrier by developing an application oriented project that can convert sign language into speech. The system uses English letters from A to Z which are associated with sign language and converts it into speech. Thus this module helps to solve the problem of mute people by interpreting different gestures in front of camera and producing voice output.

Sign recognition is an application of understanding the image. It has two phases sign recognition and sign detection.Sign detection find out position of different gestures. Sign recognition is used to differentiate between the various types of gestures. This module leads to development of the program and computerized application that will help in improving communication using sign language.

It will generate text and speech to make mute people independent. Our motto is to develop a system that will recognize hand gestures of mute people. This also includes finger spellings.This module makes use of a camera that captures the live images. They are then given to OpenCv. Camera captures the gestures and those are matched to the database image and matched images gives output as text, text is then converted to speech using text to speech converter.

Related Work

As per the research there are some systems available which convert sign language into corresponding speech. This conversion is carried using smart gloves, which recognize different hand gestures and convert it into speech. Analysis of gloves is implemented optically and mechanicallyusing sensors. The sensor produces electrical signal from the finger movements. Limitation of the system is that if the resistance or voltage of flex sensors varies then corresponding output will change[10].

Some similar real time ideas such as – Voice for Mute System was developed to translate different hand gestures into voice message. The work is built using Microsoft visual 2010 which is an IDE(Integrated Development Environment) from Microsoft. This provides a platform to image processing library such as OpenCV along with C++ programming language. Due to use of MSV (C++)compilation is explicit[1].

Design of Communication Aid for physically challenged was developed to recognize gestures and produce corresponding voice output using MATLAB[2].

The full duplex intelligent communication system for deaf and dumb people is basically conversion of recognized gestures into text and speech and vice versa[7].

Proposed System

The system is developed for mute people to overcome problems faced while communicating with normal people. Here, first hand gestures are captured by using Raspi camera module and image processing is done through OpenCv .The OpenCv code written in python is trained to examine the hand gesture, then the hand gesture is matched with a trained database. The matched hand gestureis compared with text in the text database. The raspberry pi generates corresponding speech signal through speaker.

Camera

Audio Jack

(Speaker**)**

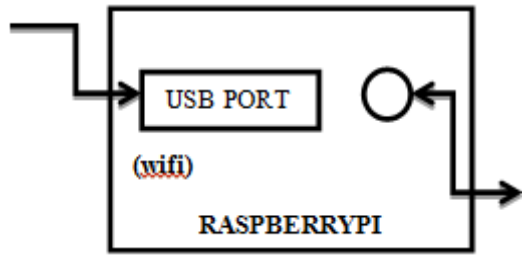

Fig. 1) General Block Diagram

The flow chart of the proposed system is as follows:

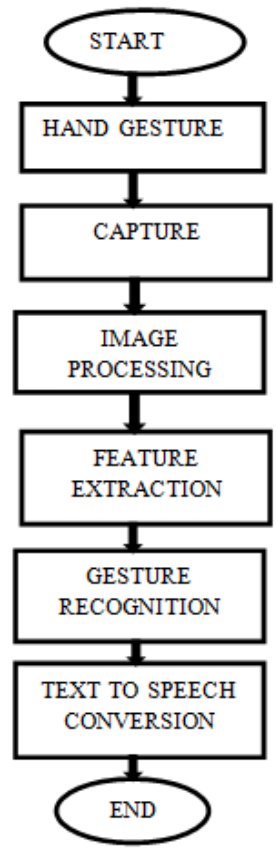

Fig. 2) Flow chart

e ISSN 2348 –1269, Print ISSN 2349-5138
Marathwada Mitra Mandal, Pune

1. Input Device: Images of hand gestures are captured using input device (camera)and further given for image processing.
2. Image processing: Every gesture of hand captured by Raspi camera is converted into binary form which is initially in RGB form.
3. Feature extraction: Segmentation of images is done to simplify further tasks.
4. Gesture recognition and hand tracking system: Here two processes take place, gesture detection and matching. In gesture detection, signs are identified and marked by a rectangle.In gesture matching images are matched with associated text.
5. Text to speech: Text is converted into speech using text to speech convertor.

System setup

The setup consists of a python3.7.2 along withOpenCv. In order to configure python with OpenCv steps are as follows:-

Step1: Environment setup

In order to setup the environment to use python and OpenCv,from the search bar open python IDE (Integrated Development Environment), then click on new file, select new project, click on save as choose the directory to store the file and then start writing code. In python version 3.7 there is no need to add pip library as it is already installed. We have to add various libraries such as:

i)NumPy: This library is used for mathematical operation such as matrix, required for image processing.

Syntax:
"pip install numpy"

ii) Keras: This library in python is used for deep learning , to preprocess our data, model,evaluate and optimize neural networks. It is a neural network algorithm implemented in python and which operate on top of Tensorflow.

Syntax:
"pip install keras"

iii) Tensor Flow: This library is developed by google. It's primary use is that of designing, building and training machine learning models. Tensorflow library performs all numerical computations with the aid of data flow graphs.

Syntax:
"pip install tensorflow "

System analysis

Hand gesture recognition is a computer vision technique for identifying hand in the captured image. Computer vision includes method of real world data processing. Image processing is the part of processing in which color based processing is done. The image referred in this system is a static image captured by Raspi camera. Color models are ways to store color information.

Fig. 3.1) RGB Image

RGB image is a image which is captured by Raspi camera. Every pixel represents combination of red, green, blue color intensities situated in each color plane.

1. RGB to HSV

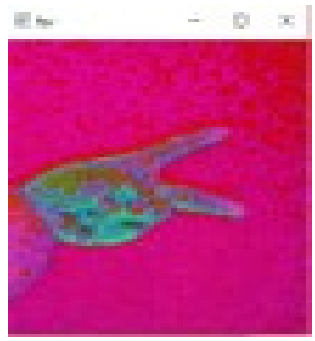

Fig. 3.2) HSV Image

HSV describes the colour in formof Hue, Saturation, and Value. The HSV module describescolour similar to human eye. HSV represents the colour type, vibrancy and brightness of the colour.Each pixel is checked to determine if it is matches a predetermined color threshold.

2. RGB to Gray

Fig. 3.3) Gray Image

RGB colour is used for identifying skin region.RGB converts the true color image RGB to the grayscale image.RGB image contains a large amount of data which is not required for processing. To discard information which is not necessary for processing ,this system uses RGB to grey conversion.

3. Graycale to Skin Segmentation

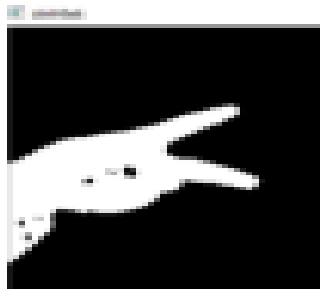

Fig. 3.4) Skin Mask

In grayscale to skin segmentation threshold value is set on HSV to remove the unwanted part or noise present in an image and subtract all other background except which is in the range of given skin colour. Colour spaces in the skin detection allow the user to specify the boundary of skin colour.

e ISSN 2348 –1269, Print ISSN 2349-5138
Marathwada Mitra Mandal, Pune

4. Skin Segmentation to Binary

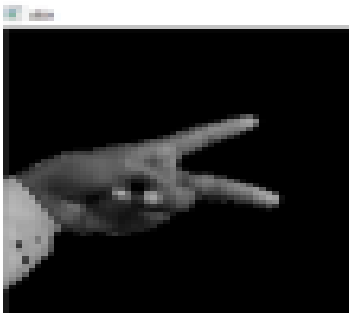

Fig. 3.5) Binary Image

In hand gesture recognition, skin detection is the primary goal. Threshold is defined to maximize the chance of skin recognition for each skin color. When there is a larger pixel value than threshold it shows one value (white),else it is assign another value (Black).

IV. Material and Methods

Database Collection

Various number and alphabets with a different gesture in sign language forms collection of database. The database created by us is in two forms. Positive database and negative database. In positive database different gestures are detected. Negative database has random background imageswithout detecting gesture. All the images that are collected are in png format. We have collected 100 images of each gesture considering distance, brightness, different angles.

Sign Detection

Hand gestures shown by user are compared withdata base created earlier and the associated hand gesture is detected.

Text Output

After detection of hand gestures it detects the resultant text output.

Speech Output

As our motto is to translate the associated hand gesture in corresponding speech, we use TTS library.

V. Observation and Result

Stage 1.Database collection

Fig. 4.1) Database

Stage2 and 3. Sign detection & text output:-

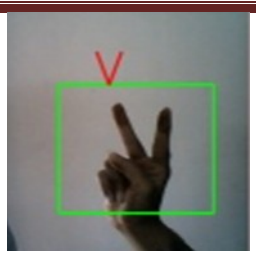

Fig. 4.2) Hand Gesture

Stage5. Speech Output :-Speech output is obtained through a speaker.

VI. Conclusion

We have accomplished our motive of helping the mute to bridge the language barrier through our system. Our proposed system captures the hand gesture,interprets the gesture and translates the interpretation into voice output.A captured hand gesture is compared with thestored data base consisting of images of various hand gestures captured from different angles. Further these are compared with associated text data base. The detected database is then converted into speech output by using TTS library.
The proposed system is implemented using Raspberrypi, python, OpenCv& libraries like Keras, TensorFlow, Numpy. We have thus proposed a solution to translate sign language to speech output.

References

1. Amiya Kumar Tripathy, Dipti Jadhav, Steffi A. Barreto, Daphne Rasquinha, Sonia S. Mathew, "Voice for themute" International Conference on Technologiesfor Sustainable Development (ICTSD),2015
2. R Suganya, T. Meeradevi, "Design of a communicationaid for physically challenged" 2nd International Conference on Electronics and Communication Systems (ICECS),2015
3. DyahRahmaKartika, RiyantoSigit, Setiawardhana, "Sign language interpreter hand using optical-flow" International Seminar on Application for Technology of Information and Communication (ISemantic), 2016
4. Muhammad Yaqoob, Javed, Muhammad Majid Gulzar, Syed Tahir Hussain Rizvi, M Junaid Asif, Zaineb Iqbal, "Implementation of image processing based Digital Converser for deaf-mute persons"International Conference on Intelligent System Engineering (ICISE),2016
5. Nikita P. Nagori, VandanaMalode, "Communication Interface for Deaf-Mute People using Microsoft Kinect" International Conference on Automatic Control and Dynamic Optimization Techniques(ICACDOT),2016
6. Suraksha Devi, Suman Deb, "Low cost tangible glove for translating sign gestures to speech and text in Hindi language"3rd International Conference onComputationalIntelligence & Communication Technology (CICT),2017
7. SurbhiRathi, UjwallaGawande, "Development of full duplex intelligent communication system for deaf and dumb people" 7th International Conference on Cloud Computing, Data Science & Engineering Confluence, 2017
8. AlfatJahanRony, Khairul Hossain Saikat, MahdiaTanzeem, F.M. RahatHasanRobi, "An Effective Approach to Communicate with the Deaf and Mute People by Recognizing Characters of One-hand Bangla Sign Language Using Convolutional Neural- Network" 4th International Conference on Electrical Engineering and Information & Communication Technology (ICEEICT),2018
9. AlexRupomHasdak,Istiaq Al Nur, Adnan Al Neon,Hasan U. Zaman, "Deaf-Vibe: A Vibrotactile Communication Device Based on Morse Code for Deaf-Mute Individuals"9th IEEE Control and System Graduate Research Colloquium (ICSGRC),2018
10. DiptiJadhav, AmiyaTripathy, "Gesture Aided Speech For Deaf and Mute"3rd International Conference for Convergence in Technology (I2CT),2018

e ISSN 2348 –1269, Print ISSN 2349-5138
Marathwada Mitra Mandal, Pune

Automatic Robo Vehicle System for Military Border Area

Shubham Amrutkar, Rahul Harishchandre, Pranay Khadgi, Prof. Mrinalini Pangaonkar
Dept. of E & TC,
Marathwada Mitra Mandal's College of Engineering,
Pune, India

ABSTRACT: *The border areas or human restricted areas need to continuously monitor intruders like terrorist, and civilian of other nation. Human loss is the big problem in this area, so we developed an Army Robot to operate in this area which is used to perform dangerous activities. There is various application of the army robot such as military, border surveillance, bomb detection and various other military operations. The main issue in every country is the soldiers are shot down by the terrorist, and there is huge loss of soldiers in that area, so to avoid the loss of the soldiers we developed a robot which uses Raspberry Pi camera for the detection of the terrorist. The exact position and distance of the terrorist is detected with the help of TF mini Lidar laser range finder sensor. Hence the objective is to replace the soldiers with an army robot which is used to avoid the human loss and perform various abstract activities. This robotic technology must be implemented by every country to protect the lives of many soldiers. As per our purpose, the robot moves in a fixed area with a pre-defined path, and the robot moves on perimeter wire for a path, wires are buried under the ground.*

Keywords: *Raspberry Pi- 3b, Arduino UNO, Image processing, TF mini lidar, electromagnetic actuator..*

1. Introduction

The aim of this project is to develop an Army Robot or vehicle which is used to detect and target the presence of intruders like terrorist in the human restricted area. Due to increasing human loss across the border of every country, we need to replace the soldier with a robot which is used to perform various military operations and used to save the life of a soldier. We are concentrating mainly on the application of border surveillance where an Army Robot is used to monitor the border area which helps to reduce human loss. The robot also used to detect the underground mines, border patrol, bomb detection and various other military operations. We are concentrating on the application of border surveillance, detection of intruder and targeting, where the intruder detection is to be done with the help of camera placed at the front side of the robot. For detection, Image processing is required which is to be processed by raspberry pi. The robot is moving in a predefined path in a fixed "Human restricted area". Initially, the robot is moved on perimeter wires for path, it is to be controlled by Arduino UNO ATmega-328 microcontroller. During motion of robot it may occur obstacles, ultrasonic sensor is used for obstacle avoidance. Along with, TF mini Lidar sensor is mounted on a robot to measure the precise distance between the robot and intruder. If the intruder detected by camera, further the robot stops in its current position and TF mini lidar sensor evaluate the distance and targeting or firing mechanism occurs. The communication occurs between Raspberry Pi RF receiver module and base station. It will send message to base station that intruder detected at the human restricted area, so take some actions. The Arduino Due is used for time critical and heavy I/O applications. The Raspberry Pi is used for graphics processing and networking applications.

II. Motivation

Nowadays the ambush by terrorists increasing day by day exponentially at the border areas. There are several terrorist organisations who are deployed across the border areas, especially India-Pakistan border. Having their heavy ammunition storages, launch pads etc. through which the terrorists are send it to make ambush on the soldiers across border areas. It causes heavy amount of soldier death. Due to the harsh and bushy areas at the border, it does not able to see the intruder exactly. Most of the times intruder also comes and wore with Ghillie suits so soldiers cannot able to identify the intruders by having their binoculars. Foremost the emphasis is given to the unmanned robot. The movements of some malicious activities are detected by precise sensors at the border areas. Mostly it happens that all the intruders are not terrorists, so we make sure that not having casualties to them, so in the proposed system we classify the object using image processing and according to that the firing mechanism operated. Use of such Intelligent Unmanned robot may reduce the killings of soldiers and efforts put by them. It may be the reason to reduce the terrorism across borders in the future. The Main motivation behind the whole project is that to save the precious lives of our soldiers who fight for us. In the existing world, many countries like Israel, USA, Russia

who are having their own advanced technology robots operated across borders to save their soldiers. Sometimes, we feel that we also have some robotic technology to save our precious life of our soldiers at the border areas. So, we come up with small prototype model of detection and targeting model using raspberry pi and Arduino UNO. It may replace soldiers using unmanned army robots.

The motivation of movement of robot from one point to another point is robotic mover, across the fence.

Fig. 1. Robotic Mover

III. Problem Definition

The prototype model having robot chassis having crawler belt for terrain regions, been powered up by 12v LI-PO battery. Camera interfaced with raspberry pi for image processing and for locomotion of robot is to be done using Arduino UNO, gets interfaced with servo motors, DC motors, TF mini Lidar sensor and ultrasonic sensor. To enhance the problem definition, we used a GUI to see the live camera stream and sensors activities at the base station. There also TF mini GUI to evaluate the precise distance of object within 12m of range.The ultrasonic sensor HC-SR04 is used for obstacle detection.

IV. Working of Model

The prototype model working is divided into two phases.

A combination of machine learning with image processing is used to make a machine learn to recognize a person and track that person in the given footage. Our project is all about a system which have been designed to track human in the given videos.

- For the first phase of human detection, the program takes a video or a sequence of videos as input. In the next step, it sets up a Histogram of Oriented Gradients (HOG) descriptor which is a feature descriptor used for detecting objects with the help of a Support Vector Machine (SVM).

Algorithm for Image processing:

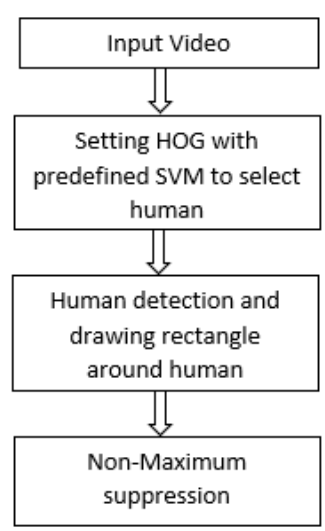

- HOG along with SVM is used in our program with the help of Open-CV library to detect humans. As the program then detects humans and a rectangle is drawn around the human. In some cases, our program

e ISSN 2348 –1269, Print ISSN 2349-5138
Marathwada Mitra Mandal, Pune

draws more than one rectangle for single person because of false positive cases, to minimize such false positive cases, in the next step our program uses non-maximum suppression to select a rectangle based on maximum overlapping criteria.

Here, the first phase is completed.

- In the second phase, the locomotion of robot is to be done, but both the phases are executed simultaneously. In this phase, the robot gets powered up by 12V LI-PO battery. The robot having two DC motors to move forward and backward direction to move across the fence on a perimeter wire sensor for a specified path. A servo motor is mounted on a chassis of a robot, which is rotating 180 degrees, over which the camera and TF mini Lidar sensor is mounted.

When the robot is moving, if the camera detects an intruder, the robot will stop, and TF mini Lidar sensor evaluate the distance between intruder and robot precisely. By obtaining the distance we made a program to find its x and y axes. After obtaining the x-y axes the microcontroller gives the high signal to electromagnetic actuator to show the firing mechanism for prototype model purpose.

At the base station, receives the signal on the GUI on PC to take the further actions also we can see the live video recording on it.

Structural Block Diagram

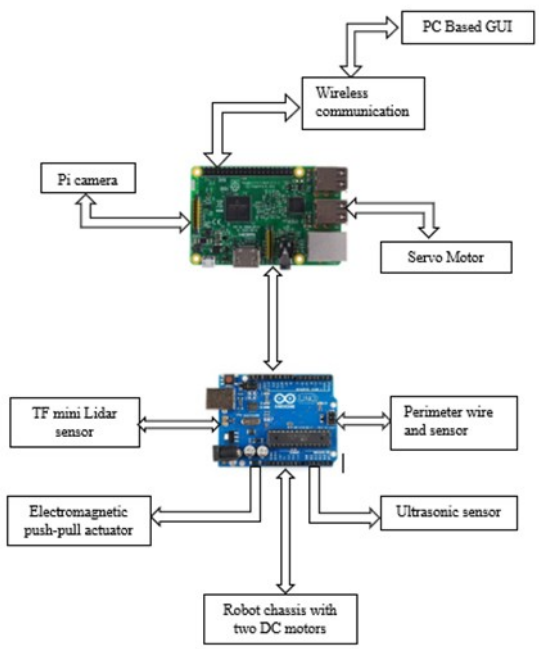

Challenges we faced

Firstly, detecting humans in all possible postures like standing, sitting, lying etc. was a great problem.

Secondly, detecting humans in all possible orientations and to find out its x-y Axes location.

V. Results

In this section, we have provided the details about the results obtained by us while using this program against some of the test cases. We have explained the output of each and
every test case using the screen shots of the output provided by our program.

- In image processing, we obtained the input video of 30 Frames per second(fps) the 1st system gave an output speed of just 4-5 fps. On the other hand, the 2nd system gave an output with a speed of 10-12 fps on the raspberry pi.
- Simultaneously, we obtained the sensor readings for distance measurement.

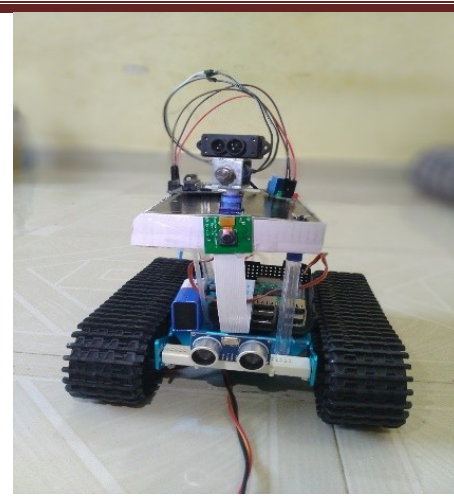

Fig. 2. Prototype model of robo vehicle system

- With the use of perimeter wire sensor, we obtained the varying voltage due to change in electromagnetic magnetic field, when sensor bit far from the wire (in loop).

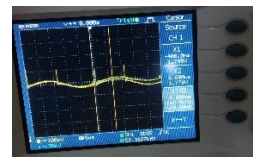

Fig. 3. DSO reading.

- In the other case, if sensor comes near the wire the inductance changes due to varying electromagnetic field.

Fig. 4. DSO reading.

VI. Future Scope

- With the use of Thermal Imaging cameras or sensors. For e.g. FLIR cameras to sensethe heat of living beings. It can be used in the night to detect and sense the heat radiations of living beings.
- "Terahertz communication" is required to see, what kind of ammunition or things does intruder carried with him hiddenly.
- It is to be done using image processing.
- Long distance laser range finder to sense the intruders up to the range of 20km.
- Self-destruction.

VII. Conclusion

The hypothesis of project is to implement prototype model of army robot to reduce soldier efforts at borders by replacing unmanned robots. We are satisfied with our hypothesis to place the robot and obtain continuous surveillance, detection and firing mechanism using implemented model. This ensures human restricted border areas are bit secure by using upgrading technology. By achieving, the lidar sensor senses

the object by sending the light ray and receives the same ray when it is reflected from intruder called as "Time of flight", its distance reading showed on TF mini GUI.

References

1. R.Thilagavthy(Ph.D)."IntelligentUnmanned army robot". International Journal of Advanced Research in Computer Engineering & Technology (IJARCET) Volume 4 Issue 2, February 2015 473 ISSN: 2278 – 1323.
2. M. Karthikeyan and Mr.G.Shreeram"Intelligent exploration and surveillance robot in defense environment".
3. International Journal of Advanced Research in Electrical, Electronics and Instrumentation Engineering.An ISO 3297: 2007 Certified Organization Vol. 3, Special Issue 1, February 2014 National Conference on Innovation & Challenges in Electrical & Electronics Engineering (NCICEEE'14) Organized by Department of EEE, Sri Sairam Engineering College, West Tambaram, Chennai - 600 044, India on 18th February 2014.
4. Emad Felemban. "Advanced Border Intrusion Detection and Surveillance Using Wireless Sensor Network Technology" Int. J. Communications, Network and System Sciences, 2013, 6, 251-259 http://dx.doi.org/10.4236/ijcns.2013.65028 Published Online May 2013).
5. J. Gong, Y. Duan, K. Liu, Y. Chen, G. Xiong and H. Chen, "A Robust Multistrategy Unmanned Ground Vehicle Navigation method using Laser Rader", Proceedings of the IEEE International Symposium on Intelligent Vehicles, (2009).June 3-5; Beijing, China.
6. Jeff Cicolani. book-"Beginning Robotics with Raspberry Pi and Arduino: Using Python and OpenCV".
7. P. T. M. Saito, R. J. Sabatine, D. F. Wolf and K. R. L. J. C. Branco, "An Analysis of Parallel Approaches for a Mobile Robotic Self-LocalizationAlgorithm", International Journal of Future Generation Communication and Networking, (2009).

Automatic Rising Bollards for BRT Lanes

Suyog Korpe, Pratik Shirode, Mahesh Bothe, Prof. S. N. Deshmukh
Department of E & TC,
Marathwada Mitra Mandal's College of Engineering,
Pune, India

ABSTRACT: *India is one of the fastest growing country in the world, with increase in population, technologies, industries, IT parks etc. To get more opportunities people are moving towards growing Cities/Areas and this leads to increase in Vehicles that are owned by the people. Due to increase in the number of Vehicles traffic has become the major issue for us. For controlling the traffic various solution has been put forward such as, increase in number of highways, expressways and in cities having separate lane for public transport(BRT lanes).In cities now-a- days people having private vehicles are using separate lane that is allotted for public transport, ambulance and fire extinguisher in accordance to save the time. But due to this the speed of public transport has been slow down and people who are using public transport are facing issues like are getting late for the office and travelling time of the people is getting increased. For safety for people the private vehicles should not be allowed to enter the BRT lanes .For this we have proposed the solution that is Automatic rising bollards for BRT lanes. This solution can help us to resolve the problem of traffic and insure the safety of people using public transport.*

Keywords: *Raspberry-pi, Servo motor, RFID tag, RFID reader, IR sensor.*

1. Introduction

In Various countries like USA, Japan, China, Russia the bollards are commonly used for serving various purposes like car park security, Traffic management, Driveway access control. Automatic bollards successfully restrict access to car parks, controlling vehicle access in and out of an area. Traffic management involves the exclusion of vehicles altogether to create pedestrian zones or creating priority lanes for public transport. Bollards can be utilized to protect your driveway from vehicle theft. Bollards can be carried out manually, electrically, pneumatically or hydraulically and respond to various security specifications and design requirements. Nowadays Hydraulic rising bollards are designed especially for high security vehicle entrances and for locations that has to be closed for motorized traffic on specific times. But in India the use of bollard is less. In our project we are implementing bollard system in BRT lane. In India automatic bollard will play an important role and help us to control traffic. The bollards are also known as barrier system which are used to protect military, governmental buildings and other buildings for highest security purpose. Generally bollards are implemented using hydraulic system. But hydraulic bollards are costly, complex to install and their maintenance is high. So instead of Hydraulic bollard system we are using servo motor for automatic raising and lowering of bollards. Servo motor used in the system is SG90 servo motor. In our system we use of RFID mechanism. RFID mechanism consist of RFID tag and RFID reader. RFID tag will be tagged on the vehicles which are allowed to pass though the BRT lane. Our system also contains Raspberry-pi. Through our project we are providing bollards for the BRT lanes in India.

II. Literature Survey

1. [2]"Designing of Hydraulic Bollard System Using Accumulator Bladder for Better Security Solutions": This paper is about the design and working of hydraulic bollard system. This system gives information about the hydraulic bollard which plays an important role in controlling traffic. In this paper author explains the importance of bollard in shopping malls, Government buildings, DRDO's etc.
2. [1]"An Intelligent Parking Management System for Urban Areas ": This paper is about efficient management of parking spaces on both public roads and controlled zones. Wireless sensor network are used in this paper. Traffic sensor are also used in order to inform the driver about the parking slot which is been free/empty.
3. [3]"Vehicle Barriers- development of a model and standard": This paper is about vehicle barriers that are been tested in US and UK. Vehicle barriers and bollards are widely used to control vehicle access to areas for ~ security, safety or social reasons in various parts of world. The main threats to vehicle barriers in the UK have come from criminal 'ram-raiders' attacking shops and offices.
4. [4] "Visibility Evaluation Experiments of Optical Wireless Pedestrian-Support System Using Self-illuminating Bollard": This paper is about pedestrian movement support system and visible light

e ISSN 2348 –1269, Print ISSN 2349-5138
Marathwada Mitra Mandal, Pune

communication. In this paper the pedestrian movement support system using visible-light communication (VLC) with light-emitting diodes (LEDs) has been developed.

5. [5]"Electronic Road Pricing System Prototype": This paper is about Electronic Road Pricing System design prototype based on embedded system Raspberry-pi with RFID. The paper propose an idea of the ERP system prototype using camera, Raspberry Pi, RFID system, and a personal computer as server.

III. Proposed Work

Here we put forward an automatic rising bollard system using raspberry-pi for BRT lanes. The vehicles will consist of RFID tag which will be allowed to pass through BRT lanes. The vehicles without RFID tag will be not be able to pass through BRT lane. The system consist of Raspberry pi which is one of the main component of the system that stores all the information about the RFID tag. The servo motor is used to control bollard. Servo motor will get the information through Raspberry-pi and IR sensor. When the Vehicle containing RFID tag will be moving through Lane RFID reader will read the RFID tag and pass the information to Raspberry-pi. Raspberry-pi will instructs same to the servo motor and servo motor will function bollard accordingly. The vehicle will smoothly pass through BRT lane. After the vehicle passes through the bollard, at the certain point in BRT lane IR sensor is placed which will detect the movement of the vehicle and instructs the servo motor to raise the bollard. This system is proposed in order to control the traffic and stop private vehicles from entering the BRT lane.

IV. System Architecture Overview

The system comprises of RFID mechanism which include RFID tag and RFID reader, servo motor, IR sensors and raspberry-pi. The servo motor used is SG90 servo motor. Raspberry-pi is 0w.EM-18 RFID module is used. At the entrance of the BRT lane the RFID reader will read the tag and passes the information to the raspberry-pi. The information of all RFID tags are saved in raspberry-pi. If the information passed by RFID reader by reading the tag is present in raspberry-pi, it will instruct the servo motor to lower down the bollards and vehicle will be passed through the BRT lane and if the vehicle without RFID tag enters the BRT lane then RFID reader will reader nothing and no information will be passed to the raspberry-pi. Hence Servo motor will not get any information form Raspberry-pi and bollards will remain as it is. The vehicle will not be allowed to pass through the BRT lane. The servo motor is responsible for raising and lowering of bollards. The IR sensor is placed beyond the bollards to detect the motion of the vehicle. Once the vehicle is passed thought bollard, IR sensor will pass the information to the servo motor and servo motor will raise the bollards.

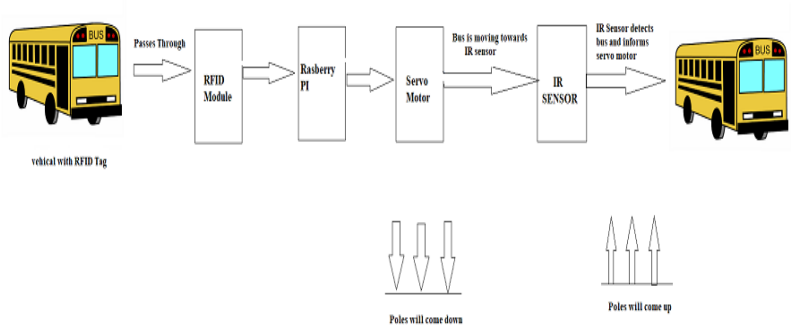

Fig. 1 Architecture Diagram

Table no. 1: Comparison between Raspberry PI and Arduino

Raspberry PI	Arduino
It is a mini computer with Raspbian OS which can runs multiple operations at time.	It is a microcontroller which can run one program again and again.
By using Ethernet port and USB Wi-Fi dongles Raspberry Pi can be easily connected to the internet.	Arduino requires external hardware to connect to the internet.

Language is python but C, C++, Python, ruby are pre-installed.	Arduino uses Arduino, C/C++.
Raspberry Pi does not have storage on board. It provides an SD card port.	Arduino can provide onboard storage.
This should be properly shutdown otherwise there is a risk of files corruption and software problems.	This is a just plug and play device. If power is connected, it starts running the program and if disconnected it simply stops.

V. Hardware Design and Description

Raspberry pi:-Raspberry is heart of our system. Raspberry pi is used to store information about the RFID tags. It functions as mini CPU.

[6] **Specifications**:

1. Processor - BCM2835
ARM v7
Single Core
1GHz
(Same as B/B+ and A/A+)

2. Memory
512MB RAM
USD slot to run OS

3. Wireless
2.4GH
802.11n
Bluetooth 4.1/BLE

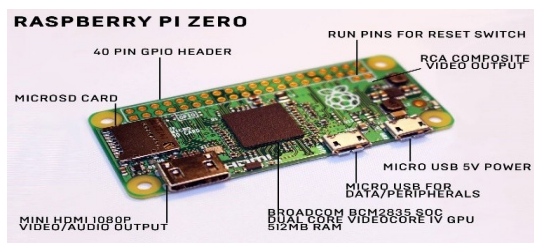

Fig 2 Raspberry Pi

[7]**EM-18 RFID Reader:-**The EM-18 RFID Reader module operating at 125 kHz is an inexpensive solution for our RFID based application. The Reader module comes with an on-chip antenna and can be powered up with a 5Vpower supply. Power-up the module and connect the Transmit pin of the module to receive pin of your microcontroller. Show your card within the reading distance and the card number is thrown at the output

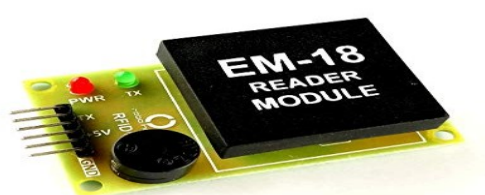

Fig. 3 EM-18 RFID Reader

[9]**IR Sensor:** It is used to detect objects and obstacles in front of sensor. Sensor keeps transmitting infrared light and when any object comes in path of that, it is detected by the sensor by monitoring the reflected light

e ISSN 2348 –1269, Print ISSN 2349-5138
Marathwada Mitra Mandal, Pune

from the object. It can be used in robots for obstacle avoidance and line follower robot. IR sensors can measure the heat of object as well as detects the motion. These sensors have very good and stable response even in ambient light or in complete darkness.

Features

- IR transmitter LED's
- 3 pin easy interface connector
- Indicator LED
- Up to 20cm range for white object
- Active high on object detection

Fig. 5. IR Sensor

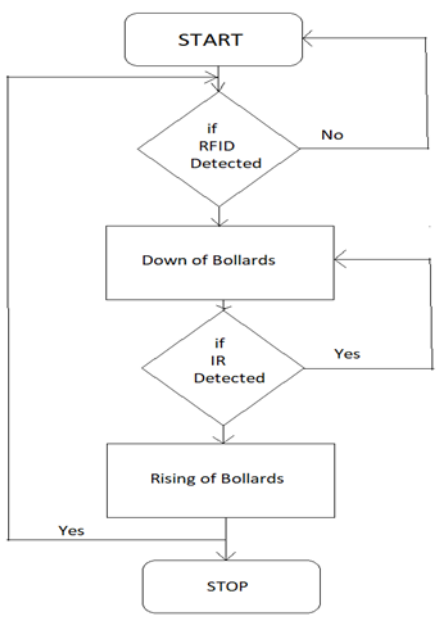

Fig. 6. Flow Chart

[8]**Servo motor:-**Tiny and lightweight with high output power. Servo can rotate approximately 180 degrees (90 in each direction), and works just like the standard kinds but smaller. You can use any servo code, hardware or library to control these servos. Good for beginners who want to make stuff move without building a motor controller with feedback & gear box, especially since it will fit in small places. It comes with a 3 horns (arms) and hardware

Specifications

- Weight: 9 g

- Dimension: 22.2 x 11.8 x 31 mm approx.
- Stall torque: 1.8 kgf·cm
- Operating speed: 0.1 s/60 degree
- Operating voltage: 4.8 V (~5V)
- Dead band width: 10

Fig. 7. SG90

VI. Conclusions

This project introduces an automatic rising bollards. Various devices like Raspberry pi, IR sensors, RFID reader and RFID tag etc. are embodied to design an efficient system for BRT lane. The system will allow only the vehicles that contain RFID tag to pass through BRT lane and the vehicles without RFID tag will not be able to pass through the lane. This system can help in efficient management of traffic.

VII. Acknowledgement

Authors want to acknowledge Principal, Head of department and guide of their project for all the support and help rendered. To express profound feeling of appreciation to their regarded guardians for giving the motivation required to the finishing of paper.

VIII. References

1. Juan A. Vera-Gómez 1 , Alexis Quesada-Arencibia 2, Carmelo R. Garcia 2 , Raúl Suárez Moreno 1 and Fernando Guerra Hernández 1.An Intelligent Parking Management System for Urban Areas
2. Bharat Bhushan et al Int. Journal of Engineering Research and Applications www.ijera.com Designing Of Hydraulic Bollard System Using Accumulator Bladder for Better Security Solutions Himmat Singh, Bharat Bhushan, Dr. R.K. Gupta.
3. International Journal Of Advance Research (2013),Volume-1,Issue 6,241-247 www.journalijiar.com Premises Entry Restriction Using Proximity Card Access Control by P.O. Olagbegi And B.A. Ugbi
4. SaekoOshiba,ShunsukeIki,Jun Yabuchi, Yoshikazu Mizutani, Kumiko Kawabata, Kanako Nakagawa, Yoji Kitani, Saori Kitaguchi, Kazunari Morimoto. Visibility Evaluation Experiments of Optical Wireless Pedestrian-Support System Using Self-illuminating Bollard
5. Lundy Orlando Tjandra, Saptadi Nugroho, Darmawan Utomo Electronic Road Pricing System Prototype.
6. https://cdn.sparkfun.com/assets/learn_tutorials/6/7/6/PiZero_1.pdf
7. http://www.alselectro.com/files/rfid-ttl-em18.pdf
8. http://www.ee.ic.ac.uk/pcheung/teaching/DE1_EE/stores/sg90_datasheet.pdf
9. https://www.indiamart.com/proddetail/ir-sensor-module-for-arduino-rasberry-pi-16016512830.html

e ISSN 2348 –1269, Print ISSN 2349-5138
Marathwada Mitra Mandal, Pune

Implementation of PCB plotter based on CNC machines using Arduino

Akshata Mulik[1], Dattatraya Patil[2], Mrunmayee Mirashi[3], Prof. Harshada Burande

ABSTRACT: *In today's modern world need for electronic gadgets/machines is increasing rapidly. Hence the use of automatic machines is becoming a necessity. This paper is about using CNC machines; we can draw a layout on PCB boards. Manufacturing of low cost CNC machines are used to diminish the complex structure and cost of the machines.*

At first the user need to convert any image file or text file into G code using All to G code converter software and then feed it to the machine using GRBL controller software. Arduino Uno with an Atmega328 controller is used (in this project). All to G code converter converts the image file into set of the instructions and through these instructions the system will work.

Keywords: *Computer Numeric Code(CNC),Printed Circuit Boards(PCB), G-code,GRBL, Arduino.*

1. Introduction

PCB's are produced from a very long time. As the technology developed the need for the PCB's also increased. In the previous time PCB's were produced using the ironing method and measure and draw.In the measure and draw method there were possibilities of manual errors and in the ironing method it was not 100% accurate and precise. To overcome these errors the need for automatic machines increased. It is a 3D controlled 2D plotting machine. In this method the machine can draw on any flat surface such as paper,boards,etc. Such machines can process logical instructions interfaced with the computer. These instruction are provided in the form of code,text or image which then gets transformed to machine language to be executed by the machine. In this method we use simple objects to draw the tracks i.e. pen. This method is introduced as it is less complex ,cheap, and the parts used are available in low price. Also this method is more precise and accurate.

Objectives

The main motive of the project is to design and construct the low cost PCB plotter using CNC tools and Arduino. This system reduces the cost of system and increases the flexibility.

Methodology

CNC plotter is basically drawing a given image as it is on a plane surface. Image file need to be converted into a G-code using All To G Converter which is the input to the microcontroller. This code is given to the arduino by which three motor mechanism is instructed. The machine has three axes X,Y and Z for handling the mechanism of stepper motor and servo motor. X and Y axes are provided with stepper motor and Z axis with servo motor. The stepper motor associated with 'Y' moves in forward and backward direction. 'X' axis moves in right and left direction. 'Z' axis is allotted to a Pen which is operated with servo motor to up and down movement which is in terms of angles. For purpose of drawing only two angles are used. 30 degrees leads to down movement by which PCB can be drawn. And 80 degrees to take a pen in upward direction.

Block Diagram-

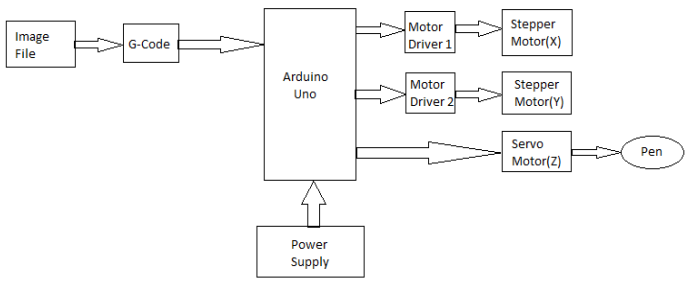

Fig No.1

PCB Plotter can be fabricated using RaspberryPi as a microcontroller but as Arduino is used its cost and complexity reduces to a great extent. So the Arduino Uno is used which has ATmega 328 core. Arduino Uno is able to interface with computer, various motors , drivers. PCB Plotter needs servo and stepper motor whose positions can be controlled by the microcontroller. It has many features including ease to use software and hardware, analog and digital I/O pins. Arduino programs are usually written in Java language using a compiler producing binary machine code.

The input to the system is simple image or layout of the circuit.Then this image is give to the G Code. The G Code controls whole process in the system. The G Code can control the step size of the stepper motor which is used to control the movement of X and Y axis.The G code Simple Control the every movement of motor so we can control the motor using G Code. Then the output from G Code is given to the Microcontroller. Arduino UNO is the main heart of the system.The actual simulation of the project is done by Arduino. The servo motor is used for only holding a pen which belong to the Z acxis. For actual drawing of the image is done by Z axis. Basically the Z axis is stationary and X and Y both axis are moving.
So using this technique we can plot the PCB layout without any difficulty.

Arduino
Arduino controller platform with ATMEGA 328 core is used in this system. This is a single chip controller which is invented by Atmel and it belongs to MEGA AVR series. This IC has 28 pins and is of 8 bits. Its architecture is RISC (Reduced Instruction Set Computer) based which uses set of instructions. It has 26 I/O pins, 32 working registers including port register, DDR register, Pin register, 32Kb of flash memory to store the Arduino sketch, 2Kb RAM, 1Kb EEPROM. It can be operated till 20MHz.

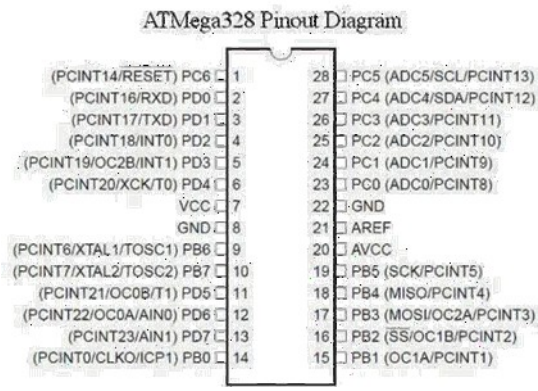

Fig No.2

Each pin is provided with 5 volt and 40mA current. There are 16 digital and 8 analog channels. We can convert the analog channels to digital channels by using inbuilt ADC if we want more that 16 digital channels by writing the proper code. Its clock speed is 16 MHz It has preprogrammed bootloader which allows the board to upload new code to it without any hardware. It has 32Kb flash memory. 0.5Kb flash memory is used by the bootloader. A USB cable or external 9-volt battery can be used for powering the board.

Stepper Motor
Stepper motor is used to convert electrical signal like digital pulses into mechanical movement in the form of equal steps. It is a synchronous, brushless motor. The motor's position can be controlled in order to move as well as hold at one particular step without the feedback.. Stepper motors are featured with 1.8 degree step angle with 2.5A current. The relation between speed of rotation and pulse frequency is direct. If the output voltage high then the torque driver is also high.

e ISSN 2348 –1269, Print ISSN 2349-5138
Marathwada Mitra Mandal, Pune

Fig No.3

Servo Motor

Servo motor is universal type AC used motor. To use servo motor for general industry robots power range is 200W-15KW. It controls angular or linear positions, it also handles acceleration and velocity. Servo motor is used in conveyor belts, robotics, textiles, woodworking, automatic door openers, solar tracking system, CNC machines, packaging industry etc. It uses position feedback to control its motion and final position.

Fig No.4

Motor Driver

It is small in size. It is used to amplify the signal from Arduino. The module is easy to learn. The logic control voltage is 3~5.5V. Its operating temperature is -25 degree Celsius to +90 degree Celsius. Supply voltage for motor is 5-15V. Motor driver coverts pulses into displacement which is in angles.The speed of the motor can be varied by the frequency of the pulse.

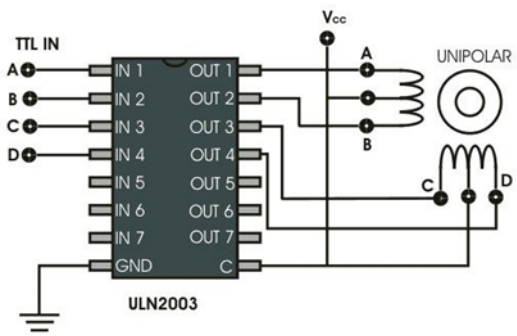

Fig No.5

Hardware Implementation

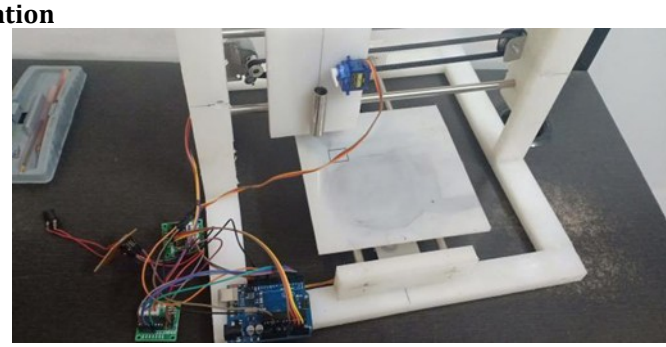

Fig No. 7

All To G Converter

It has some disadvantages like it has limited capabilities in converting certain entities and it has no conversion for large files.

All to G converter uses SCAN 2 CAD which detects the lines on the image. In very few seconds vectorization process in Scan2D takes place.After the vectorization process given image can be directly converted to G-Code.

The process used to use the All to G converter software is as follows:

Load the JPEG in SCAN 2 CAD and click vectorization option.This image is converted to a vector.

Save image in a G-code format with extentions like .Nc, .CNC, .TAP. The image is required to be of high quality for this software.

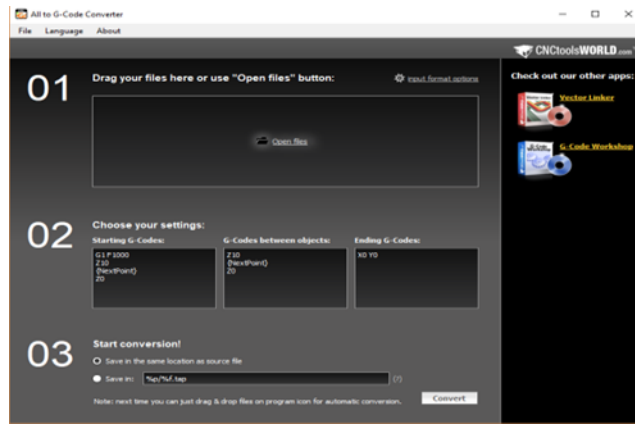

Fig No. 8

Eagle

It is an electronic design automation (EDA) software.

It enables PCB designer to connect schematic diagram, component placement, PCB routing.

It stands for simple graphical layout editor.

Eagle is used for designing circuit diagrams.

It also has computer-aided manufacturing (CAM) features like higher efficiency.

e ISSN 2348 –1269, Print ISSN 2349-5138
Marathwada Mitra Mandal, Pune

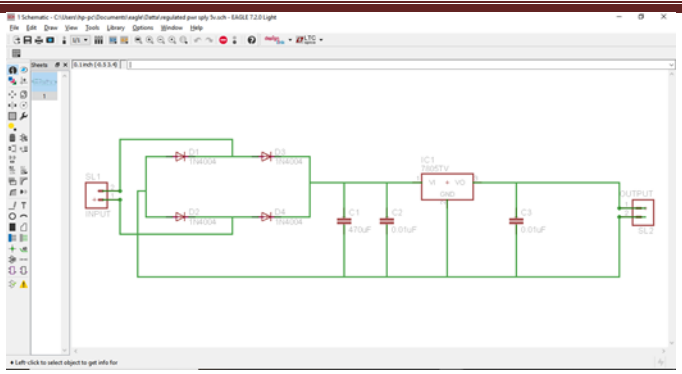

Fig No. 9

GRBL Controller

GRBL is used for controlling the movement of machines that make things move. It is free, Open source and high performance software. It is used for graffiti paintings, laser cuttings, drillers etc. It is three axis machine. More than 30KHz step rate can be maintained. Linear, Circular movements are supported by the controller.

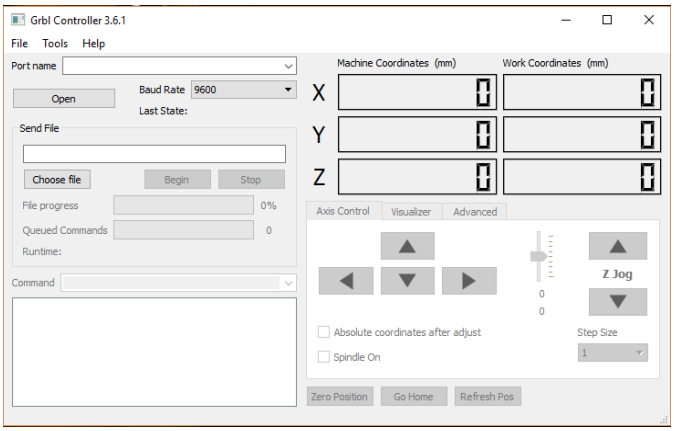

Fig No.10

Arduino IDE

Arduino Integrated Development Environment is programmed using Java language. It is a cross platform application. To fulfill features a code editor is included. Also simple one click mechanism is given to compile and upload programs to the board. A message area, text console, tool bar with buttons and a hierarchy of operation menus is also contained. It supports languages like C and C++ with the help of some mentioned rules of code structuring. To convert the code in a text file the software employs the program avrdude which is loaded in board with the help of loader program in the board's firmware.

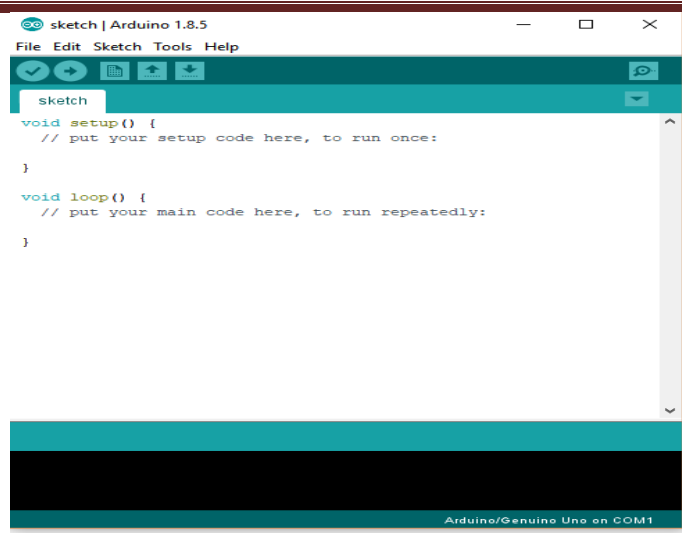

Fig No.12

Algorithm

Step 1-Start.
Step 2-Generate G-code using Eagle software.
Step 3-Send this G-code to controller using G-code sender.
Step 4-Controller commands to the motor according to the G-code.
Step 5-According to the commands motor with mechanical part moves and plot the diagram whose G-code is provided to the controller.
Step 6-Stop.

Flow Chart

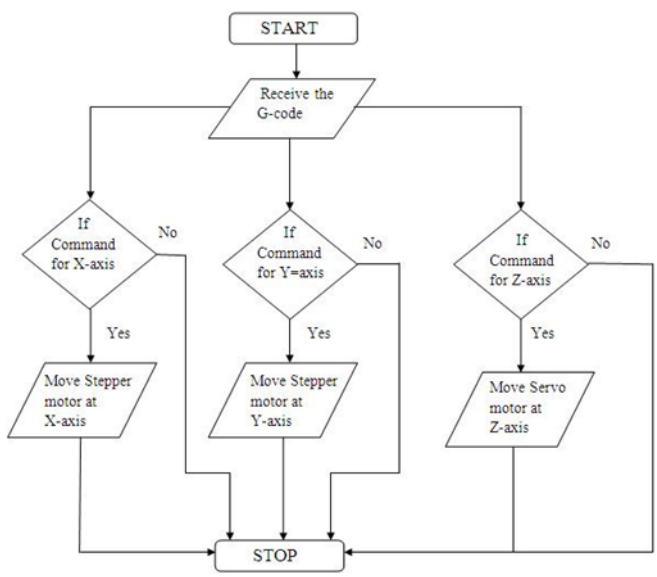

Fig No.13

Conclusion

By studying various papers we conclude that all the techniques which exist in the present can only plot but cannot track a layout. By doing this project the machine can be used to trace and plot layout from and on the

PCB.The working load is minimized due to the use of G-code with hardware. Through G-code we can monitor status of the motors on the computer. Now we can start and stop the machine when the user wants.

Future Scope

The pen can be replaced by laser to cut or engrave on a surface like wood, glass, metal sheets etc.
It also performs the working of milling and drilling if the pen is replaced by a powerful drill.
To convert the plotter into 3D printer the servo motor can be replaced with stepper motor to draw the 3D images using a 3D pen.

References

1. https://www.123helpme.com/search.asp?text=electricity
2. https://wiki.opensourceecology.org/wiki/DXF_to_G-code_Conversion_Tutorial
3. https://en.wikipedia.org/wiki/Fingerprint_recognition
4. https://www.edgefxkits.com/blog/
5. http://www.ijetcse.com/wp-content/plugins/ijetcse/file/upload/docx/561ME1813-pdf.pdf
6. https://www.ijraset.com/fileserve.php?FID=15734
7. http://www.ijettjournal.org/2017/volume-43/number-6/IJETT-V43P256.pdf
8. https://learn.sparkfun.com/tutorials/choosing-an-arduino-for-your-project/all
9. https://en.m.wikipedia.org/wiki/List_of_Arduino_boards_and_compatible_systems
10. https://www.arduino.cc/en/Tutorial/StepperSpeedControl
11. https://www.slideshare.net/Ashikapokiya12345/gesture-controlled-carproject-report
12. https://www.edgefxkits.com/blog/what-is-risc-and-cisc-architecture/
13. https://www.indiamart.com/sensorembedded/arduino-development-boards.html
14. https://universal-solder.ca/product/arduino-pro-mini-atmega328p-3-3v-8mhz/
15. https://in.omega.com/prodinfo/stepper_motors.html
16. https://medium.com/jungletronics/drv8825-driver-stepper-motor-24byj48-bb14237f4066
17. https://www.irjet.net/archives/V3/i2/IRJET-V3I2194.pdf
18. https://www.slideshare.net/saikumar354/servo-motor-and-servo-drive
19. https://engineering.eckovation.com/servo-motor-types-working-principle-explained/
20. http://robotroom.com/PWM5.html
21. https://www.pannam.com/blog/best-pcb-design-software-tools/
22. http://www.nookl.com/page/EAGLE_(program)
23. https://create.arduino.cc/projecthub/cnc-design/grbl-breakout-board-shield-arduino-uno-f3a97f
24. https://www.slideshare.net/imeklavya/mobile-controlled-robotic-arm-using-arduino-and-hc06-78445907
25. https://msdn.microsoft.com/en-us/magazine/mt808499.aspx
26. http://www.ijsrd.com/articles/IJSRDV1I3038.pdf.

Sign Language Translator

Shrijit Pendse, Harshal Chaudhari, Devesh Vaidya, Pranjal Gunja, Prof. Manisha Dudhedia
Marathwada Mitramandal College Of Engineering,Karvenagar,
Pune, India

ABSTRACT: *An integral part of human interaction is speech. Human beings talk to each other to share their emotions thoughts and experiences. This however is not the case for mute people. These people have been deprived of the basic human action of speaking. This makes the lives of these people considerably harder. Sign language has mitigated some of the problems that these people face. However this type of communication is still substantially inferior to speaking. The aim of this project, therefore, is to bridge the gap between sign language and actual speaking. The project recognizes sign language and converts it into audio. Sign language involves a lot of gestures consisting of: arms, body movement, facial expression, movement of head and so on. However the majority of sign language consists if hand gestures. Thus mapping of these gestures is the goal of our project.*

Keywords: *Arduino Mega 2560, Flex sensor, Wearable device , MIT app inventor2.*

1. Introduction

Mute people, like others, interact with a lot of people during their day to day lives. Unlike normal people however, they cannot talk. Instead they use sign language as a method of communication. Currently there are almost 143 different sign languages used in the world, with some countries, such as India, having more than one. Recently, the Mumbai –Delhi sign language was declared as the official sign language of India. However communicating in sign language is not easy as it seems. Effective communication can only take place with people who know sign language. Our project aims to change this, by creating a sign to speech conversion system. This system will convert the gestures into audio, thereby allowing mute people to communicate effectively with normal people. According to the 2011 Census[1] about 12.5 million people in India are speech impaired. Thus, this project can potentially help millions of people by improving their quality of life.

Naturally sign language, like any other language consists of a number of components. This of course includes hand gestures but also consists of facial expressions and other body movements. However this project only focuses on the use of hand gestures.

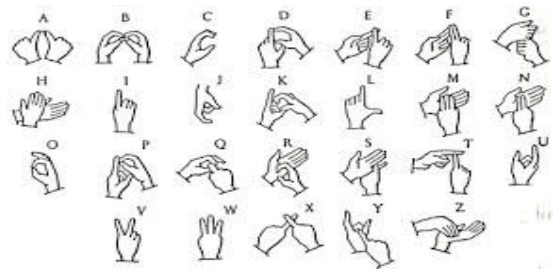

Fig no 1. [2] Indian Sign Language Alphabets.

II. Background

Enable Talk [3] is a startup who will soon launch their speech converter glove in the market. However, there is no similar product in the Indian market, as of yet.

P.Vijayalaxmi[4],in her paper proposed a sensor based glove which can map gestures and produce speech at an accuracy of 87.5%.However the project relies on machine learning and a Hidden Markov Model(HMM) for converting gestures to speech. This places a soft limit on the no of gestures which can be captured.

Another popular approach is the camera based approach. Use of camera can increase accuracy up to 95%.Y.Madhuri [5] in her paper uses Matlab and Labview in order to extract features from the image. However use of camera severely hampers the portability of the device. Furthermore extraction of features requires particular background with particular colors which further restricts the device.

e ISSN 2348 –1269, Print ISSN 2349-5138
Marathwada Mitra Mandal, Pune

Thus, it is observed that sensor/glove based systems are highly portable but lack the necessary accuracy and scope, while, camera based systems sacrifice the mobility but can cover large amounts of gestures with high accuracy.
Our attempt at this project aims to maintain the same mobility of glove based systems, while also providing high level of accuracy.

III. Design of Glove

While designing the glove, we had to make it is as lightweight and easy to handle as possible.

A. For this we first started by using tactile sensors[6].These sensors are smaller than flex sensors, and detect pressure rather than bend. However we found out that this severely limited the number of gestures we could capture.So we decided to use flex sensors.
B. Our next challenge was connecting the speakers. Initially we tried to use wireless Bluetooth speakers. However for this we required two Arduinos, one for the transmitter and the other for the receiver, while using wired speakers greatly increased the weight of the glove. As a result we decided to write our own app. This made our audio system wireless while also limiting the project to a single controller.

Proposed System

The proposed system is entirely sensor based. Flex sensors are used to detect and measure bend of the fingers. Each hand consists of 5 flex sensors. They are connected to the analog inputs of the Arduino. The system has been calibrated for different users as well as different flex sensors. Fig (1) shows the block diagram of the proposed system.

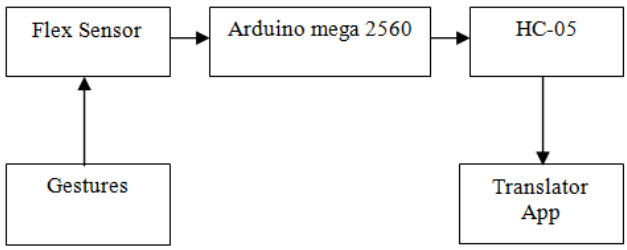

Fig no. 2 Block diagram of proposed system

Whenever a gesture is performed the corresponding voltages are sent to the Arduino. The Arduino compares these voltages to pre-defined voltage sets and if they match, plays the corresponding audio.

System Architecture

A. Flex Sensor

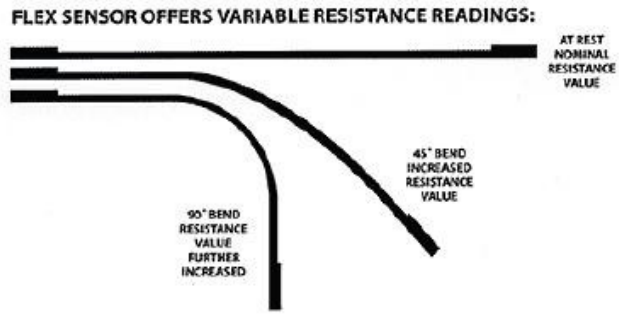

Fig no. 3 Flex sensor [7]

Flex sensors are variable resistance strips. They change their resistance in proportion to the bend applied. Hence they are ideal to detect bending in fingers.
Flex sensors have a standard value (completely straight) of 70K ohm and at a 90° bend it has a value of 30K ohm.
Flex sensor are categorized according to their length. We use a flex sensor of 4.5".To obtain detectable output from flex sensor we connect it in a voltage divider circuit. However the output of flex sensor is highly variable. This coupled with the tolerance level of the resistors and environmental noise leads to some erratic reading. Thus, for the obtaining proper readings, we use a software median filter. There are a couple of alternatives to flex sensors.

1. Potentiometers: Flex sensors are basically variable resistor strips. So connecting a straight strip to a potentiometer can yield similar results. However, while being cheap, this is a crude method which has a large potential for errors.
2. Another option for the flex sensors is using accelerometers. The output of these sensors is acceleration and thereby displacement. However these sensors are costly as compared to flex sensors and setting them up is difficult.

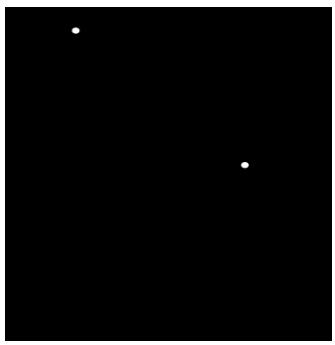

Fig. no. 4 Voltage divider [8]

The voltage divider equation is :

$V_{out} = V_{in}(R2/(R1 + R2))$

R1 = Flex sensor
R2 = standard Resistor (48K ohm).

As mentioned before, environmental noise and mechanical vibrations lead to erratic results. Thus for obtaining correct values, we need to use filters. Since the entire setup is to be mounted on the hand we need to minimize the hardware used. So there is no point in using hardware filters. Another problem with using hardware filters is that we do not have any control on which values are fed to the filter. So, we turn to software filters. We have a no of choices for software filters, viz. the Butterworth filter, moving average filter, median filter, etc. Prior to making gestures, our hand is in motion and this generates some erratic values.

e ISSN 2348 –1269, Print ISSN 2349-5138
Marathwada Mitra Mandal, Pune

The moving average and Butterworth filters are not capable of smoothing such values out. So, we turn to the software median filter.
Software median filter for flex sensor [9]:

Step 1: Take 50 values from flex sensor.
Step 2: Arrange them in ascending order.
Step 3: Remove first 5 and last 5 values.
Step 4: Take the average of the remaining 40 values.
Step 5: The average is the required output.

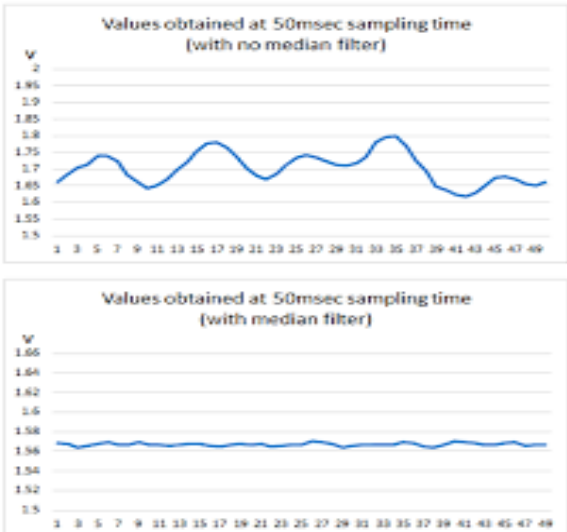

Fig no 5 .Results of using software median filter [9}

B. Arduino Mega 2560

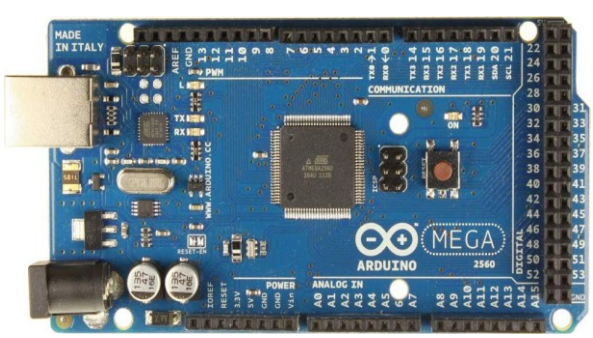

Fig. no.6 Arduino Mega [10]

Arduino is an open source user friendly development board. It can run on windows, mac, Linux and almost any operating system. It is based on the Atmega 2560 unit which has 54 I/O pins out of which 16 are analog inputs. Each hand has 5 flex sensors and one accelerometer which provides 3 analog outputs. Therefore from two hands we get 2(5+3) = 16 analog inputs. This is the reason we have selected the Mega as our controller. The Arduino has 256Kb of flash memory out of which 8KB is used by boot loader and the rest is used for storage of program and temporary variables. However this memory is not sufficient for storing our audio. Hence we interface a SD card reader module to store the audio files. The Mega does not have inbuilt Bluetooth capabilities, hence we also interface a Bluetooth module. The Mega can be powered by a portable battery 5V battery and hence can be mounted on the wrist. There are a variety of microcontrollers which could be used instead of the Mega :

1. Raspberry Pi: The raspberry pi is like a mni computer. Since our project requires little processing power, processing speed and capacity are not an issue Also raspberry pi has inbuilt Bluetooth capabilities so use of HC-05 is not required. However the PI does not have an inbuilt ADC.As a result we require an external ADC chip and we need to program either I2C or SPC protocol for this. To avoid these complexities we prefer the Arduino.
2. PIC: Programming the Arduino is way simpler than programming in PIC, as PIC requires embedded C or ALP, while Arduino provides a simple way to call libraries using the Arduino IDE.
3. Other variants of Arduino: The most common variants of the Arduino, besides MEGA, are the UNO, the Nano, and the Lilypad. All of these are smaller than the Mega so they are easier to mount on the glove. However the UNO and the NANO have only 8 Analog pins, while the Lilypad has 6 and our requirement is 8 pins per hand.

C. HC-05 Bluetooth Module

The HC-05 is a Bluetooth module which is used for transferring text from Arduino to the translator app. It can be powered from the Arduino itself and is capable of auto-connecting to the last connected device. It communicates with Arduino using serial communication. Since it works on 3.3V we use a voltage divider between its receiver pin and Arduino's transmission pin .

D. Translator App

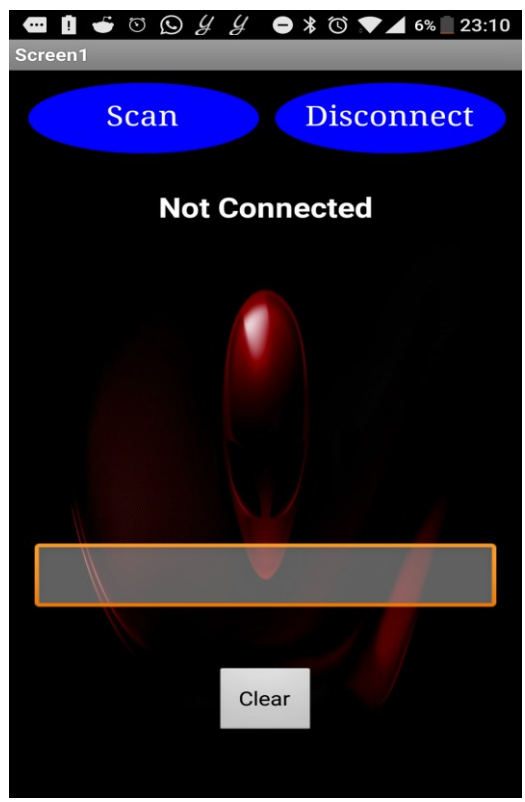

Fig. No. 7 Screenshot of app.

It is difficult to obtain clear audio from the Arduino directly since it cannot output Analog signals, only PWM. So we make use of mobile phone speakers by transmitting the data to the mobile phone. The HC-05 provides transmits text to the app and the app uses a standard text to speech agent to provide audio. We have written this app using the MIT app inventor [10].

Working of the App

Step 1: Scan and connect to the HC-05 module

e ISSN 2348 –1269, Print ISSN 2349-5138
Marathwada Mitra Mandal, Pune

Step 2: The app then receives data from the Arduino and displays it as text in the box.
Step 3: The Text to speech agent of the app monitors the text box every msec.
Step 4: If it detects that a word has appeared on the box, it converts it into speech.
Step 5: After speaking the word, it enables a separate timer.
Step 6: This timer has a period of 2msec. After 2msec the timer clears the text box and disables itself.

Step Wise Working

Step 1: The flex sensors are placed along the length of the finger.
Step 2: The Arduino unit is mounted on the right hand wrist.
Step 3: Now, depending on the performed gesture, the flex sensors will generate voltages.
Step 4: The Arduino will then compare these voltages to a pre-defined database.
Step 5: If a match is made, then the corresponding text is sent to the translator app.
Step 6: The translator app then plays the desired audio.

Results

Gesture for "C"

Output for "C":

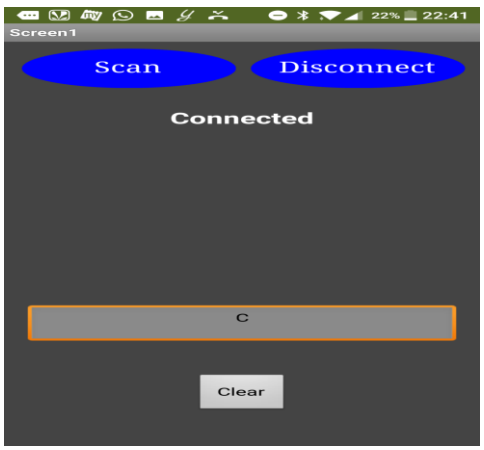

The following table consists of the gestures we used for testing, their corresponding flex values, and the accuracy with which we were able to map them in 10 tests.

Gesture	Thumb	Index	Middle	Ring	Little finger	Accuracy
OK	590-618	70-85	595-616	590-610	590-620	60%
C	609-620	100-105	560-565	570-575	560-565	70%
Leader	65-620	60-70	510-520	520-535	510-522	90%

VIII. Conclusion

Deaf and mute people suffer a lot in their lives due to lack of communication. This project proposes a sensor based approach to give these people a voice, thereby making their lives easier. The project requires very few components, while completely eliminating the need of a camera and so is low cost and practically usable. The users will wear the glove and perform gestures. These gestures are converted into text by the controller and sent to the translator app. The app can be installed on any smartphone. The glove itself consumes low power, since it only consists of a Arduino and flex sensors. As a result it can be run on a simple 9V battery.

IX. Future Scope

Currently the gloves can only map static gestures, since only flex sensors are used. Furthermore certain words have similar gestures and so it becomes difficult to map them, using only flex sensors.
By introducing tactile sensors we can resolve the ambiguity between similar gestures. With a combination of flex sensors and tactile sensors virtually all static gestures can be mapped.
Accelerometers are used to measure acceleration or tilt of the connected device. However by using appropriate algorithms[12] we can measure displacement or distance travelled using accelerometer. This can be used to capture dynamic gestures as well.Thus by using a combination of flex sensors,tactile sensors and accelerometers we can effectively map the entire sign language, barring gestures which take into account body language and facial expressions.

REFRENCES

1. http://censusindia.gov.in/2011-Common/CensusData2011.html, accessed on 21st March 2019/
2. http://www.deaftravel.co.uk/signprint.php?id=27, accessed on 20th March 2019
3. Posternikov Anton, Osika Maxim, Yaskov Valeriy , Microsoft Imagine Cup , 2012
4. Aarthi, Vijayalaxmi P,"Sign Language to Speech Conversion", Fifth international conference on recent trends in information technology,2016.
5. R. Sruthi, B. Venkateswar Rao , "Vision based sign language by using Matlab"
6. https://www.elprocus.com/tactile-sensor-types-and-its-working/, accessed on 20th March 2019
7. https://www.mouser.com/new/spectrasymbol/spectra-symbol-flex-sensor/, accessed on 20th March
8. https://upload.wikimedia.org/wikipedia/commons/3/31/Impedance_voltage_divider.svg, accessed on 20th March 2019
9. Osama Nisar, Muhammad Imtaz," Performance Optimization of a Flex Sensor Based Glove for Hand Gestures Recognition and Translation",IJERT, Vol 3 , Issue 5, May 2014
10. https://www.technobotsonline.com/arduino-mega-2560-r3.html accessed on 20th March 2019
11. http://ai2.appinventor.mit.edu/?locale=en#4730178235400192
12. https://www.sciencedirect.com/science/article/pii/S0957415816300757

e ISSN 2348 –1269, Print ISSN 2349-5138
Marathwada Mitra Mandal, Pune

Attendance System Using Face Recognition

Ashish Kulkarni, Nihar Chandorkar, Prasad Natu, Prof. S. N. Deshmukh
B.E. Dept. Of Electronics and telecommunication,
MMCOE
Pune, India

ABSTRACT: *In this paper we present an automatic attendance system. This system is based on face detection and face recognition algorithms. This system automatically observes the student when he enters in the classroom and marks the attendance by identifying him. The architecture of the system and the algorithms required for the system are explained in this paper. This system saves the time as compared to traditional manual attendance system and also helps to record the students in the classroom.*

Keywords: *Facerecognition, Image processing, Face detection, Raspberry pi.*

1. Introduction

[5]Face Recognition technique is one of the most efficient biometric technique for identification of people. We can utilize it in the field of education for managing the attendance of students. There are lots of colleges and schools in which thousands of students are taking the education. In every classroom there are about sixty to seventy students are studying. To maintain the attendance and records of these so many numbers of students is a very difficult task. In a classroom with large number of students,it is a very boring and it takes more time to mark the attendance manually. Therefore we can implement an effective system which will mark the attendance of students automatically by recognizing their faces. The process of face recognition is divided into various steps, but the important steps are face detection and face recognition. Firstly, to mark the attendance of students, we require database of students. A database will be useful for comparison purpose. By enrolling the students to the database, we can maintain the information of the students like roll number, student's name and his or her photo for identification. The camera device is placed in the classroom which will capture the images of students and these images will act as input to the system. For the successful face detection,the image needs to be amplified by using some image processing techniques like greyscale conversion of image and histogram equalization.

Once the image quality is enhanced the face detection procedure can be performed on the images.[1]In the face detection step, we need to use various algorithms like Ada-boost algorithm. To recognize the faces is the next task to be done. For face recognition, the comparison of captured images and database is main task to perform. After the process of face recognition the attendance report will be generated in the form of excel sheet.

2. System Description

The faces of students who are present in the classroom will be captured by the camera situated in the classroom. [1]The faces from captured images will be detected by Ada-Boost algorithm. The face detection algorithm observes the certain haarfeatures like eyes, nose, lips etc. of a human face. The algorithm allows the candidate to pass to the next stage, whenever one of the feature is found. The detected faces will be cropped so that the images can be compared with the images stored in the database. After the comparison with the database the faces that are matched are marked present in attendance. Now, as we know database development is very essential step in this project. The different images of individuals will be taken in different angle, light intensity with their personal details like Name, Roll no., Division and Class. The camera which is used for image capturing will be placed inside the classroom which will cover whole area. For getting good accuracy in detecting the faces, background subtraction is done. The image after background subtraction is used for face detection. In face detection the face of images are marked with the help of rectangle or circle. The face detected after background subtraction is accurate as compared to the face detected from an image which is not background subtracts. The detected face is then cropped. Finally all the faces of individuals are detected and cropped from the images. Each cropped image is taken for the comparison of images in database.[2] Face recognition is used to identify the detected face.Eigen valuemethod is for face detection. After face recognition, the report will be generated which will show the present students in the classroom .The report will be generated in excel sheet.

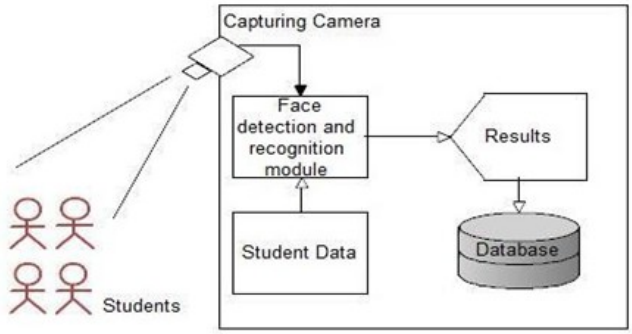

Fig -1: Experimental set up

2.1 Technical Requirement

2.1.1 Hardware Requirements

- Raspberry pi 3.0 because it offers a higher clock cycle of 1.2GHz as well as it gives better GPU than other versions
- Camera which is to be placed inside the classroom for capturing images.
- Resolution : 640x480 pixels
- HDMI to VGA converter to convert computer HDMI video port to VGA.

2.1.2 Software requirements

- Raspbian OS for raspberry pi
- Python
- OpenCV

3. System Algorithm

This section describes the algorithm for the system.
The algorithm consists of the following steps

- Image Capture
- Pre-processing
- Face detection
- Face recognition
- Database development
- Mark attendance
- Generate report

3.1 Image Capture

The camera will be placed inside the classroom facing at entrance and will capture image when IR sensor will give signal. This captured image will be used to verify and identify the students to mark his or her attendance.

3.2 Pre-processing

It includes image cropping, image resize and image enhancement. In image cropping, region of interest is cropped from acquired image . In image resizing, the cropped images are resized to 48x64 pixels for face recognition. Resized images are converted from RGB to gray scale format. In image enhancement, to improve the contrast of the image, histogram equalization technique is used.

3.3 Face Detection

[4]A proper and systematic face detection will surely enhance the performance of face recognition system. Face detection is used in various applications that recognize human faces in digital image. Face detection algorithm focuses on the detection of human faces. It is similar to image detection in which image of person is compared bit by bit. Then images captured by camera are compared with the images that are stored in the database. If there are any changes in facial features in the database it will negate the matching process. Reliable face detection approach based on Haar-cascade algorithm is carried out.

e ISSN 2348 –1269, Print ISSN 2349-5138
Marathwada Mitra Mandal, Pune

3.4 Face Recognition

Face recognition is the next step after face detection. Image is cropped and used for comparison. For face recognition, faces are verified one by one using the Haar-cascade method. It will display the name of person infront of the camera if its database is stored in a system.

3.5 Database Development

Database development consists of image capturing of every individual and later it is amplify using preprocessing technique and stored in database. We must take images of individuals in different angles, different expressions and also in different lighting conditions. An unique ID is assigned to every student and after recognition it will display name assigned to the particular ID.

3.6 Mark Attendance

After identifying the face of students, the data of students is updated into a database. The data of present students are then sent to the server computer and if the captured face is matched with the image in database then attendance of present students is marked.

3.7 Generate report

The report of the present students will be created in excel sheet.

4. System Flow Chart

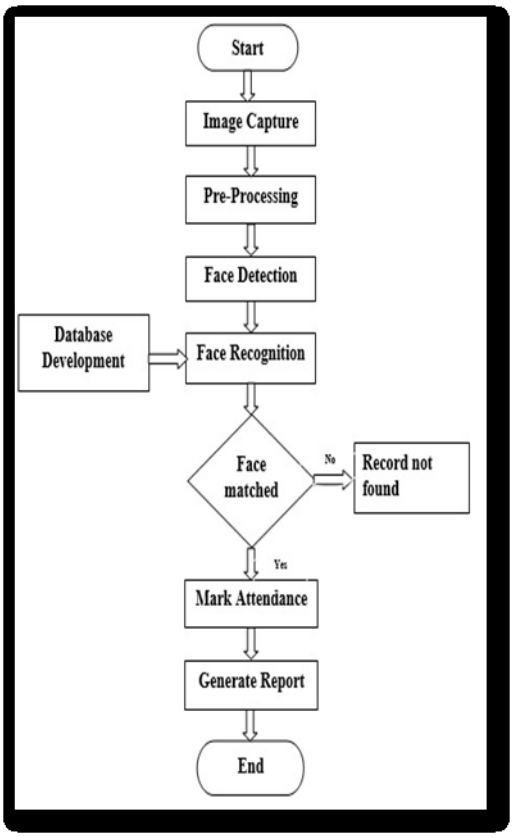

Fig 2. Flow chart of the system

5 Advantages

- It savestime andefforts.
- Thesoftwarestoresthefacesthataredetectedand then marksattendance automatically.
- Thesystemis more suitableandmore reliablefortheuser.

- • Thesoftwarecanbeusedforsecuritypurposesin institutes, firms, companies and securedzones.

6 Disadvatnatges

- It cannot detect face from a far distance.
- In poor light the system does not works properly and gives incorrect results.

7. Conclusion

The smart and automated attendance system should be proven as well organized system for classroom attendance. By using this system the chances of fake attendance and proxies can be reduced. Lots of biometrics systems are used for managing attendance, but the face recognition has the best performance so we need to implement an authentic and systematic attendance system for classroom attendance which can work for numerous face recognition at one time. The management of attendance in this method is simpler and the attendance is taken more accurately. A camera device and a standalone PC, database servers are sufficient for constructing the smart attendance system.

8. Future Scope

The project has a very vast scope in future. The project can be applied on intranet in prospect. The project can be modernized in nearby future an, when an obligations for the same arises, as it is very flexible in terms of development. And the enhancement approach of camera planning based on outcome of the position valuation in order to progress the face detection effectiveness. In future work, will intend to improve the face detection efficiency by means of the interaction among the system, students and the lecturers. The enhancement process will work on the process of capturing the image at a far distance by having heavily high resolution camera. On the other hand , the system can be enriched by integrating video streaming services and lecture archiving system, to provide more profound applications in the field of distance education , coursesss management system and support for faculty development.

References

1. Yasaman Heydarzadeh, Abol Fazl Toroghihaghigh "An Efficient Face Detection Method Using Adaboost And Facial Parts", Ijssst.
2. Priyanka Wagh, Jagruti Chaudhari, Roshini Thakare, Shweta Patil.Attendance System Based On Face Recognition Using Eigen Face And Pca Algorithms
3. M. Turk And A. Pentland, "Eigenfaces For Recognition,"Journal Of Cognitive Neuroscience, Vol. 3, No. 1, Pp.71-86,1991pp-303-308,2015
4. Anjana Mall, Mrs. Shusmita Ghosh, "A Neural Network Based Face Detection Approach", Int. 1.Computer Technology & Applications, Vol 3 (2), 823-829, July 2010.
5. Anil K. Jain, Arun Ross & Salil Prabhakar, "An introduction to biometric recognition", circuits and system for video technology, IEEE transcation on volume 14,Issu 1, Jan 2004 Page(s):4-20

e ISSN 2348 –1269, Print ISSN 2349-5138
Marathwada Mitra Mandal, Pune

Vending Machine Using Arduino

Pooja Jadhav, RushikeshJadhav, Dilshad Sheikh, Prof. Anagha Kunte
Marathwada Mitra Mandal's College of Engineering,
Pune, India

ABSTRACT: *Now a days soft drink vending machine available in various places, but in India, there are less vending machines for the solid product. Proposed work to design vending machine for dispenses the product like snacks, medicines, food items, beverages etc. with the help of multi-coin acceptor. The important use of this multi-coin acceptor is it can avoid the fake currency and allow only original currency. In the current system, vending machine it allows to pass duplicate coin or currency. But our system overcomes all the drawback of the system. We design a low cost-effective vending machine. Also, we use GSM System to check the presence of product in the slot, also it up to date the count of the product in a machine to its owner. GSM is also used for theft detection in a machine.*

Keywords: *Arduino Uno R3Microcontroller, Multiple Coin Acceptor, GSM, DC Gear Motor*

1. Introduction

The aim of vending machine is to give the instantaneous refreshment to the customer [3]. A vending machine that gives the products like drink, chips, lotto tickets, trade good, and also gold and jewel to customers automatically, after user insert coin or currency into the machine [2]. For quickly the automatic cold drink vending machine, ice-cream, chocolate vending machine, water, tea, Joe vending machines [5], etc. can be mostly found to the shops [2]. This diminishes the time and also the people effort required to identify, look, count and distribute the product. Vending machines are available based on the different principle, like Microcontroller, CMOS, SED, FPGA based vending machine.

We design the simple; cost effective Arduino Uno based vending machine which can give the product or an item in simple steps to the customer. In this we are using the multiple coin acceptors to customer. The principle is very simple user or customer pay to the machine then machine will give the selected product or items to the user. The internal circuit consists of DC gear motor LCD display, Arduino Uno R3 microcontroller, and push button and Multiple Coin acceptor. Proposed work plan the vending machine for dispense a product such various types of chips, chocolates, etc.

II. Literature Survey

In this section briefly some technique for availability of snacks and vending monitoring system, advantages and disadvantage of each of the technology set are described. Also relative survey of project papers with our current project and how it can be implemented in addition with the present system.

A. Present Scenario

In preceding vending system is based on processor [1] and also it uses RFID vending machine is used in various shops but this system has complex coding [6]. This system consist of sensing of the normal coin, then of it decides direction of product deliver to user, connecting the dc motor to deliver perfect number of product, and using RFID tags [6]. But the disadvantages of this system are if the putting of fake coins it accepts. This multiple coin acceptor overcomes the previous machine's drawback i.e. it cannot accept the fake coins made by the other metal, material. If peoples or user uses the same size, density, weight to make the duplicate coin then these coins are prevented by the multiple coin acceptor. The principle is very simple user or customer pay to the machine then machine will give the selected product or items to the user. In coin collector can not detect, through item not provide to user. The coin sensor detects the thickness and the size of the coins. It accesses the items by using fake coins with the same substance and size of material.

To overcome drawback of this system we are using the multiple coin acceptor.

Also the previous vending machine based on the Finite State Machine, this type of machine can give the auto billing features. But this system is not more feasible [4].

B. Design Objective

To design a good vending machine, it has following features:

1. Sell four various types of solid product and accept six types of coin.

2. Small size and less power consumption.
3. Accept only original coins, detect the fake coins.
4. 4.To reduce time loss and the unneeded crowding in the various types of shops.
5. Easily operate by Users.

III. Block Diagram

Vending machine basic block diagram is as shown in fig. 1.

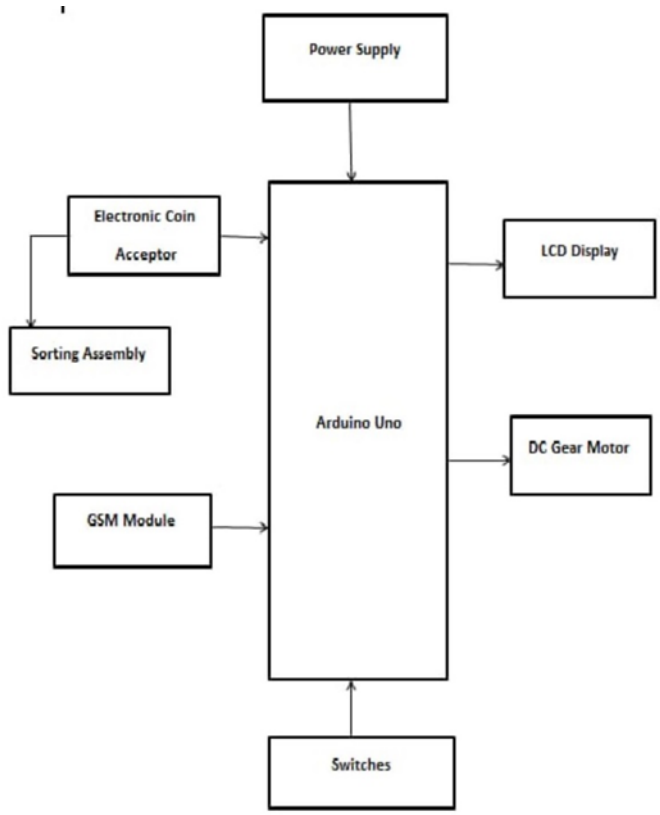

Fig. 1: Basic Block diagram of vending machine

The internal circuit consists of DC gear motor LCD display, ArduinoUnoR3 microcontroller, and Push button and Coin acceptor. When the system got power supply the microcontroller will go to on stage and it will run the loaded program. According to the program "select item" will display on the LCD screen. The LCD will show command to choose the quantity for the opted product. When the customer mention the required quantity the motor will turn as programmed in Arduino and then items will full down at thebase of vending machine

A. Design of Vending Machine

The Vending machine proposed in this paper, is made by the following list of components:

1. Arduino Uno
2. Electronic coin acceptor
3. GSM module
4. DC gear motor.
5. LCD display
6. Dispenser Unit
7. Coin Sorter

e ISSN 2348 –1269, Print ISSN 2349-5138
Marathwada Mitra Mandal, Pune

1. Arduino Uno

The proposed system works on Arduino UnoR3 Microcontroller. The Uno is different from the all the boards, it does not need the FTDI USB to serial driver chip for the controller we need External power supply of 6v-20v DC. It has a Crystal Oscillator frequency of 16 MHZ and it has 16 Digital input/output pins.

Table no. 1: Comparison between Arduino and 8051 Microcontroller

Arduino Uno	Microcontroller 8051
1. Arduino=Microcontroller +Crystal +power supply pins, bootloader.	1.Microcontroller=Microprocessor +Interfacing circuitry.
2. Arduino has integrated with all circuit.	2. Microcontroller needs to interface the power circuit with it.
3.Arduino can programmedeasily using the Arduino IDE	3. Microcontroller uses only programmed through Keil C or assembly code.
4.Its GPIO can source out 40mA of current	4.Its GPIO source out 15mA of current
5. Operating voltage is between +5 volts to max 20 volts	5.Operates on +5 volts to max 6.6 volts

2. Multiple Coin Acceptors

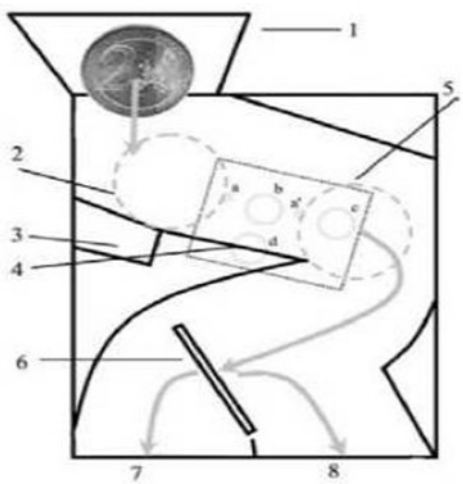

Fig. 2: Coin discriminator [7]

When a user want dispense the item, it needs to insert the coin in a slot, it goes on upright and first hits farrier, then it rolling below a short ramp of about ten centimeters. In this various sensors are placed with this path, and using this sensor's output to decidescoin is fare or fake, then the coin is reaches to the machine storage or returned to the customer. The sensors for the measure properties such as coins, like dimensions, dynamism, magnetic permeability, flexibility, etc.

3. GSM Module

GSM is mobile communication model. We are using GSM module in our project to give the information about slot to its owner. We decide the particular count of the product in the slot, after this when slots reaches to that count then the information of that particular slot given to its owner using the GSM. User gets the availability of any product. We could prevent the issue of the empty slot. We will provide the reliability of system.

I. Operating frequency range: 900-1800MHZ
II. Multiple Access Method: TDMA/FDM
III. Transmission Power: 33dBm+/-2dBm
IV. Input Voltage: 5-36V dc
V. Input current: 1-2A

4. DC Gear Motor

The DC Gear Motors are used in machine to rotate the spring in forward direction as well as reverse direction.

I. Operating voltage of DC motor: 12V.
II. Torque-2Kg Cm.
III. Shaft Diameter: 6mm
IV. Load Current: 300mA
V. RPM-100

5. LCD Display

It uses thelight properties of liquid crystals display. LCDs are used to display images with low information content. When the user insert then the various available products in the machine are display on the LCD, then the user can select the product whatever he want.

I. 16x2 character display
II. 5x8dot controller
III. 8.6 x36x80 mm dimension

6. Dispencerunit

Dispenser box made up of two slots which stores the snacks. Spring rotate with the help of stepper motor. It makes the snacks to move forward up to outlet. This makes easy and safe for customer to collect snacks.

7. Coin Sorter

Coin sorting mechanism is used to sort different types of coins. Different containers are used to store the coins. It is attached with coin acceptor.

Wooden Assembly of Vending Machine is as shown in Fig. (3). this fig shows the prototype of machine in which the product can be placed and these product are dispense by user.

In this prototype we are using the DC motor and spring for the dispense the product.

Fig. 3: Wooden Assembly of Vending Machine

IV. Flow Chart

Flow chart of vending machine shown as in fig.(4)

We implement this successfully using Arduino Uno.

e ISSN 2348 –1269, Print ISSN 2349-5138
Marathwada Mitra Mandal, Pune

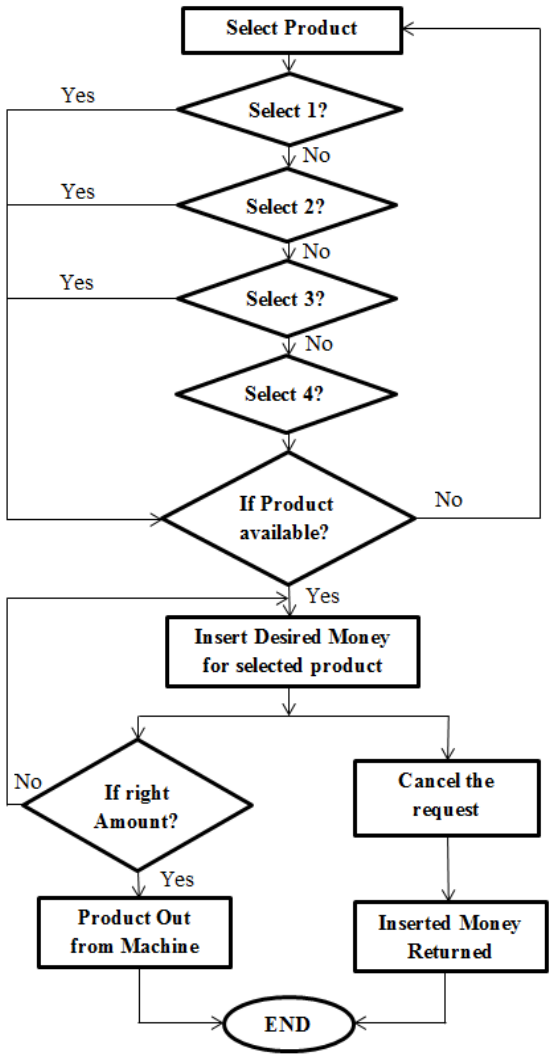

Fig. 4 Vending Machine Flow Chart

V. Advantages

1. The proposed system accepts only fare coins and detects the fake coins.
2. Reduces the time consumption, and Easy to operate by all peoples.
3. Cost of the proposed system is low.

VI. Application

1. Proposed system can be used in break rooms, Hotels, Shops, Hospitals and remaining stops around the world.
2. Also it used in public area like bus stop, airport, and railway stations.

VII. Future Scope

In the proposed vending machine we can extend the features such as in built CCTV camera in machine for security purpose. Also if any fault occurs in the system then the message is given to its owner using GSM.

VIII. Conclusion

This vending machine uses the multiple coin acceptors to accept only the real coin and detect the fake coin. This vending machine is technically feasible to fullfill people's need during any period. It is easy in use and it is helpful in any place for common people i.e. places such as railway station, bus stop, etc. The additional GSM facility insures product availability to make system more reliable.

IX. References

1. P.Pradeepa1, T.Sudhalavanya1,K.Suganthi1,N.Suganthi1, M. Menagadevi ,"Design and implementation of vending machine using Verilog hdl,'' Suganthi et al.,E-ISSN 0976-3945.
2. Kalaiselvan. P, Irshath Ahmed.R, Mohamed Aamir.M, Kalaiselvan. P, "Automatic Paper Vending Machine'', (IJSETR), Volume-4, Issue-4, April 2015.
3. DeshmukhAnkush ,KalamkarBhushan&JadhavS., "Implementation of Fingerprint Assist Wending Machine with Recharge Option",International Journal of Electronics and Electrical Engineering (*IJEEE*), Vol 1, Issue 3, 2012.
4. Ana Monga, Balwinder Singh, "Finite State Machine based Vending Machine Controller with Auto-Billing Features," in 2012 International Journal of VLSI design & Communication Systems (VLSICS) Vol.3, No.2, pp 19-28.
5. Biplab Roy, and Biswarup Mukherjee , "design of a coffee vending machine using single electron devices," in 2010 International Symposium on Electronic System Design pp-38-43.
6. AneeqaRamzan, SaadRehman, Aqib Perwaiz , "RFIDTechnology: Beyond Cash-Based Methods in Vending Machine," 2017 2nd International Conference on Control and Robotics Engineering.
7. https://www.researchgate.net/figure/Schematic-of-a-coin-discriminator-1-Coin-entry-2-Coin-rolling-3-Anvil-4-Coin_fig3_4255710

e ISSN 2348 –1269, Print ISSN 2349-5138
Marathwada Mitra Mandal, Pune

Smart Classroom System Based on IOT

Daghale Prasad, Khune Prasad, Yalamgonde Yogeshwar, Prof. Vishal Salve
Electronics and Telecommunication,
Marathwada Mitra Mandal College Of Engineering,
Karvenagar, Pune, India

ABSTRACT: *If we are entering in a classroom in a queue, there will be a lot of waste of time in picking up there own materials,they have to sit up and down for the questions which they have to answer.It is very difficult for a teacher to handle a maximum number of students without any other technology.If we consider an average,a student is spending about 1025 hours a day just to follow the instructions which are given by the teachers to the students.There are certain technologies like connected devices which will help the teachers to focus on what knowledge is a student getting.Teachers will understand that they dont have to waste time on managing large group procedures,since they are getting their focus on developing some extra qualities in students.these technologies are very helpfull for the teachers to get the transformed classroom experience.This paper contains the practical scenarios of about how IOT is getting implemented for a better classroom experience and the ability of techers to focus on students skills.*

Keywords: *Internet of Things (IoT), future Smart Classroom, Implementation, ATTENDANCE monitoring..*

1. Introduction

In todays world, some of the information as well as communication technologies are present and their application in successively considerable in terms of education. ICTs helps with a great power to get improvement in the outcomes of learning and teaching. The most important role is played by the classes for the transformation of traditional education into modern education. It also helps to maintain the quality of education as well as curriculum ` achievement.

If we are discussing about intelligent classes, and it gathers information of connected objects in all domains, like field of education. The application of IOT helps to build and ecosystem where students and teachers can understand their environment and can get a knowledge regarding the change of learning using IOT.

III. Literature Survey

The structure of smart learning process via IOT plays a vital role for the education system which is going to get designed in future somehow.

These structure will provide a smart education including the communication between the objects and the students who are getting used to this education system.

Somehow when objects will start to communicate with persons in class , there will be a less requirement of teachers just because students can easily get interacted with these smart class room systems.

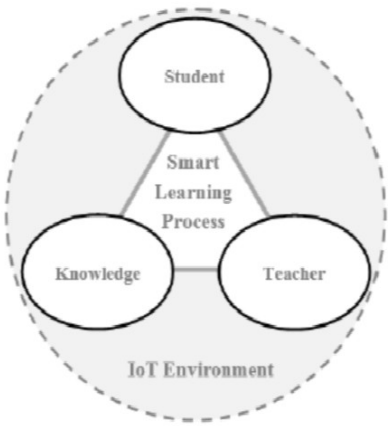

Figure1. IOT in smart learning

The literature surveys draws our attention towards the smart classroom system based on IOT. Some of the journals are analysed and the content is presented. We understand about what journals are presented and published and now we are presenting our ideas for a better improvment in the existing system.

Table 3.1 literature survey

Title	Author	Work	Remark
Smart Classroom Environment Via IoT	Hicham EL Mrabet	exchange information through intelligent objects.	Wireless interfacing using IoT
Active Learning and Virtual Worlds	M. Saylor	Inserted iot network.	Methods to create smart classroom
Flip your classroom	B. Jonathan	operation of smart classrooms.	Developed automatic system
Educational Living Labs	Jeannette Chinand Vic Callaghan	assessing the techonology	Blutooth connectivity

IV. Block Diagram

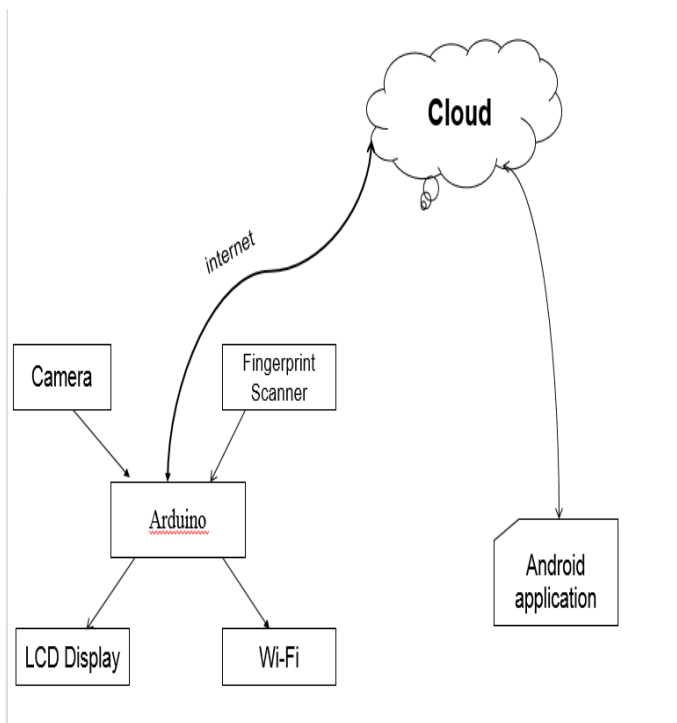

Fig 4.1 Block Diagram Of Smart Classroom System

V. Description

V.A. Arduino Mega

e ISSN 2348 –1269, Print ISSN 2349-5138
Marathwada Mitra Mandal, Pune

Fig 5.1 Arduino mega

The arduino mega is fully based on the ATmega1280.Its a type of microcontroller which is having 54 digital input/output pins.14 pins from these input/output pins can be used as pulse width modulation outputs, also has 16 analog inputs as well as 4 UARTS and a crystal oscillator of 16 MHz .
It also consists of a USB connection ,power supply, an Icsp header as well as a reset button. It is eligible to provides everything which is required to support a microcontroller. It gets started by simply connecting it with a USB cable.

V.B. Fingerprint scanner

This type of fingerprint scanner is a sensor module with a TTL UART interface. It helps the user to store the data present in the module and a ratio of 1:1 or 1:N mode for recognize the candidate. Optical fingerprint sensor is present in R307 Fingerprint scanner with high speed DSP processor and some other hardware software compositions like high range flash chips & high-performance fingerprint alignment algorithm.
It provides good performance as well as easy structure with fingerprint entry as well as image processing. Other functions like fingerprint matching , search as well as template storage.
The 2 interface TTL UART and USB 2.0 present in the fingerprint module can be attached to the computer.

Fig 5.2 Fingerprint Sensor

V.C. Arduino camera

Performing image processing is the quality of arduiono camera such as AWB i.e auto white balance, AE which is known as automatic exposure and AGC i.e automatic gain control.
We are interfacing this camera with arduino just because to get a live streaming of the classrooms.
The output of this camera will be in a good quality digital video signals using standard CCIR656 interface.

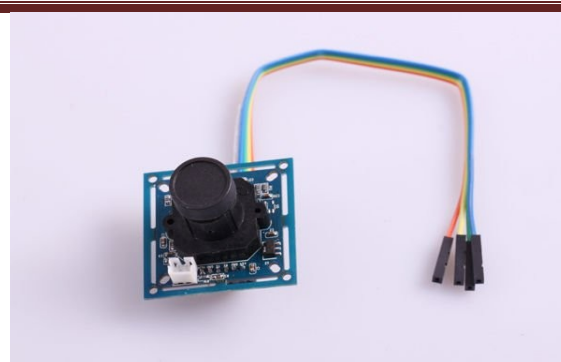

Fig 5.3 Arduino camera

V.D. WI-FI

Espressif System produced ESP2866 which is a wifi system on an integrated chip which is designed to provide a good internet connectivity in very small packages. It can also be worked as an external wi-fi module several standard AT command set Firmware by connecting it to any microcontroller using the serial UART, and by programming a new firmware it can be directly served as a wifi enabled microcontroller.

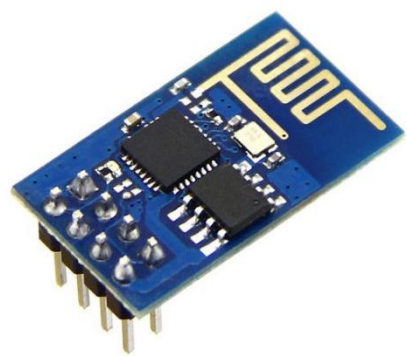

Fig 5.4 ESP2866

V.E. LCD Display

As the name LCD suggest liquid crystal display which is a digital display module and is eligible to find various applications. We are using a LCD display of 16x2 lines. which is commonly used in variety of applications. It is preferred over a seven segment LCD display. These LCDs are easily programmable and also it does not have limitations for displaying special or some custom characters. Command and Data are 2 registers of this LCD display.

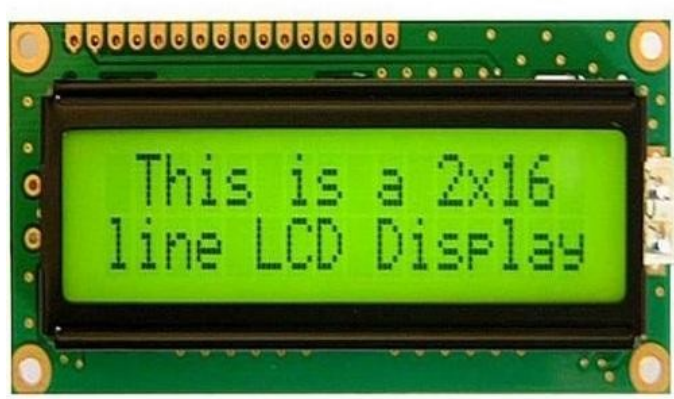

Fig 5.5 LCD Display

e ISSN 2348 –1269, Print ISSN 2349-5138
Marathwada Mitra Mandal, Pune

VI. Conclusion

We have proposed a smart classroom system based on IOT to reduce efforts and wasting of time using the basic component such as arduino mega, finger print scanner,camera,LCD display.

VII.References

1. In Vol. 6, Issue 2, 9-21, 1999 "How To Improve Teaching Quality", Quality Management Journal, by L. R. R. M. Felder and R. Brend
2. In VOL. 38, pp. 253-266, 2002, "The Intelligent Classroom: changing teaching and learning with an evolving technological environment", by Winer, J. Cooperstock.
3. In Signa Processing, Vol. 86, Issue 12, pp. 3518- 3533, 20006, "Audiovisual perception of a lecturer in a smart seminar room" By R. Stiefelhagen, K. Bernardin, H. K. Ekenel, J. McDonough, K. Nickel, M. Voit, M. Woelfel
4. "What are the limitations of Internet of Things" By ProfessionalAhmed Banafa
5. "A Smart Class System based _on SoD" By Dong-oh Kang, Kyuchang Kang , Hyungjik Lee, Joonyoung Jung, Changseok Bae , Jeunwoo LeeSS

Vehicle Tracking and Accident Detection System Using F.P.G.A.

Sheeba Mathew#1, Emily Esther Kurian#2, Anshul Pandita#3, Anuj Jagtap#4
Department of Electronics and Telecommunication
Fr.Conceicao Rodrigues Institute of Technology, Vashi, Navi Mumbai.
[1]sheebas.mathew@gmail.com, [2]emy.estherkurian.kurian@gmail.com, [3]anshulpandita96@gmail.com, [4]aj08jagpotaj@gmail.com

ABSTRACT: *This project mainly aims to track the location of the vehicle by the owner or anyone who wishes to get information regarding the location of the vehicle. It can be used in public transportation systems like buses or trains or for commercial purposes.[1] In case any accident occurs, the system sends automated messages (S.M.S) to pre-programmed numbers like the Police, Ambulance or the owner of the vehicle.[1] This uses a GPS (Global Positioning System) to know the exact position of the vehicle. GSM is used to receive an SMS from the user requesting the location of the vehicle and respond to the user via SMS. An accelerometer is used for accident detection purpose. When there is any accident, an accelerometer sensor is triggered and it sends a signal to the FPGA. An FPGA is used to control and co- ordinate all the parts used in this system. The FPGA circuit processes the input and sends the appropriate output according to the programming done. This can also be used for other purposes such as asset tracking, stolen vehicle recovery, fleet management, field service management or field sales.[1]*

Keywords— *FPGA, GSM, GPS, vehicle tracking, accident detection, accelerometer*

I. INTRODUCTION

Many business and commercial organizations find it important to keep a track of the vehicles when used as assets in business. Stolen vehicles can also be easily recovered, using the concept of vehicle tracking. In highly populated countries like India during accidents, people lose their lives due to unavailability of proper medical facilities at the right time.[1] Vehicle Tracking systems can prove to be helpful in this case too by sensing any accident and intimating pre-programmed numbers such as ambulance, police, the owner, etc. about the position of the vehicle. All these applications demand the use of Vehicle Tracking Systems. Till date vehicle tracking systems have been implemented using embedded systems but through this project, we propose a more manageable, fast and long lasting implementation of the system using FPGA (Field Programmable Gate Array). The system uses a GPS (Global Positioning System) to know the exact position/location of the vehicle, along with a GSM module, which receives SMS request from user and later sends the required location information back to the user via SMS. An FPGA can be reprogrammed over and over for different tasks, and they are flexible for faster prototyping hence making them very cost efficient by avoiding recurring expenses. Where performance is king, FPGAs set themselves apart in highly parallelized tasks. Thus an FPGA is used to control and co-ordinate all parts used in the system.

II. MATERIALS

A. HARDWARE

i. Field Programmable Gate Arrays(FPGA)

They are semiconductor devices that are based around a matrix of configurable logic blocks (CLBs) connected via programmable interconnects. FPGAs can be reprogrammed to desired application or functionality requirements after manufacturing. This feature distinguishes FPGAs from Application Specific Integrated Circuits (ASICs), which are custom manufactured for specific design tasks.These devices could support a small number of flip-flops (usually 10) and were able to implement small state machines. Complex Programmable Logic Devices (CPLDs) were developed to address the limitations of simple PAL devices. These devices used the same basic principle as PALs, but had a series of macroblocks. The FPGAs were the next step from CPLD. Instead of a fixed array of gates, the FPGA uses the concept of a Complex Logic Block (CLB). The CLB has a Look-Up Table (LUT) that can be configured to give a specific type of logic function when programmed. The CLB can be made combinatorial (non- clocked) or synchronous (clocked), and there is also an enable signal. A typical FPGA will have hundreds or thousands of CLBs, of different types, on a single device allowing very complex devices to be implemented on a single chip and configured easily. If you need just a little logic the CPLD can be a less expensive option.

e ISSN 2348 –1269, Print ISSN 2349-5138
Marathwada Mitra Mandal, Pune

Fig. 1. FPGA controller kit (SPARTAN 3E-XCS3S500)

The FPGA board used in this project
Spartan 3E.Its specifications are shown:

TABLE I. - Spartan 3E (XC3S500E) Board specifications

Feature	Details
XC3S500E Design specifications	CLB Rows: 46 CLB Columns: 34 CLB Total: 1,164 LUT's/Flip –Flops: 9,312 Logic Cells: over 10,000
PROM	4 Mbit Platform Flash configuration
NOR Flash	16 MByte (Intel StrataFlash)
SPI Serial Flash	16 Mbit (STMicro)
Oscillator	50 MHz clock oscillator
LCD	2-line, 16-character LCD screen
PS/2	1 PS/2 mouse or keyboard port
VGA	1 VGA port
FX2	Hirose FX2 expansion connector
RS-232	Two 9-pin RS-232 ports (DTE- and DCE-style)
Power Supply	5V

ii. GPS

The Global Positioning System (GPS) is a space based global navigation satellite system (GNSS) that provides reliable location and time information in all weather and at all times and anywhere on or near the Earth when and where there is an unobstructed line of sight to four or more GPS satellites. It is maintained by the United States government and is freely accessible by anyone with a GPS receiver. When people talk about "a GPS," they usually mean a GPS receiver. The Global Positioning System (GPS) is actually a constellation of 27 Earth-orbiting satellites (24 in operation and three extras in case one fails).[1]

Our project uses Neo 6M GPS module and it's specifications are listed below:

TABLE II. NEO 6M GPS module specifications

Feature	Details
Receiver type	50-channel u-blox 6 engine GPS L1 C/A code SBAS:WAAS,EGNOS,MSAS
Navigation update rate	Up to 5Hz
Accuracy	Position 2.5m CEP SBAS 2.0m CEP
Power supply	2.7V-3.6V
Power consumption	111 mW @ 3.0 V (continuous) 33 Mw @3.0 V Power Save Mode(1Hz)
Sensitivity	Tracking : -161 dBm Cold starts : -147 dBm Hot starts : -156 dBm
Operating temperature	-40 °C to +85 °C
Serial Interfaces	1 UART 1 USB V2.0 full speed 12Mbit/s 1 DDC(I2C compliant) 1SPI
Protocols	NMEA,UBX binary,RTCM

i. iii. GSM

A specialised type of modem which accepts a SIM and works over a subscription from a network provider like a cellular phone is known as GSM modem.GSM modem functions as same as a cellular phone when viewed from service provider's perspective.

Our project uses SIM 900 GSM module and it's specifications are listed below:

TABLE III. SIM 900 GSM module specifications

Feature	Details
Power Supply	3.2-4.8 V
Power Saving	Typical power consumption in Sleep mode is 1.0mA
Frequency bands	SIM 900 Quad band: GSM 850,EGSM 900,DCS 1800,PCS 1900
SMS	• MT,MO,CB,Text and PDU mode • SMS storage: SIM Card
Temperature range	• Normal operation: -30°C to +80°C • Restricted operation: -40°C to -30°C and +80°C to +85°C

ii. iv. ACCELEROMETER SENSOR

Three Axis Acceleration Sensor Board based on ADXL3XX from Analog devices. This is a first generation 3 axis acceleration sensor. User could get acceleration values with respect of X, Y, and Z axis. And it is widely used in slope, and moving detection.Output sensitivity might be choose by merely setting voltage level on few pins. MMA7260Q gives output in analog mode, so we use a A/D converter to read the acceleration value.The analog output voltages are proportional to acceleration.This device will measure the static acceleration of gravity in tilt-sensing applications moreover as dynamic acceleration ensuing from motion, shock, or vibration.[1]

B. SOFTWARE

i. Xilinx ISE Design Suite 14.5

Xilinx ISE (Integrated Synthesis Environment) is a software tool produced by Xilinx for synthesis and analysis of HDL designs, enabling the developer to synthesize ("compile") their designs, perform timing analysis, examine RTL diagrams, simulate a design's reaction to different stimuli, and configure the target device with the programmer.

III. PROPOSED METHOD

Initially the user will request to track the location through SMS and the GSM module will receive that request . The FPGA is programmed with transmitter and receiver modules using UART(Universal Asynchronous Receiver Transmitter) protocols.

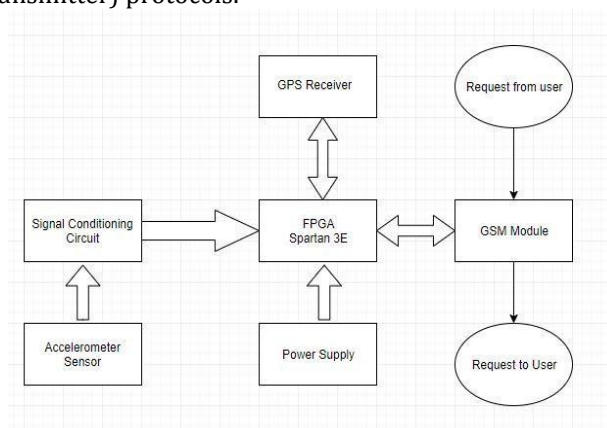

Fig. 2. Basic block diagram of the Vehicle Tracking System[1]

With the help of these modules the GSM sends a request message to the FPGA for GPS data.The FPGA then requests the GPS module for the required coordinates and then sends the coordinates back to the user through SMS. The accelerometer keeps on updating the values of the axis i.e. (X, Y, Z) and FPGA keeps on comparing these values with the predefined axis values stored in the FPGA and in case the accident is sensed it will intimate pre-programmed numbers such as ambulance, police, the owner, etc. about the position of the vehicle.The transmitter receiver modules built using Xilinx software along with external connections to the GSM and GPS modules helps us to connect the FPGA and modules together

e ISSN 2348 –1269, Print ISSN 2349-5138
Marathwada Mitra Mandal, Pune

RESULTS

The simulation results of an 8 bit Serial receiver is shown below

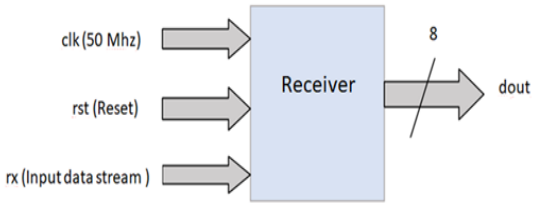

Fig. 3. Block diagram of Serial Receiver

This receiver waits for data to arrive on the RX line and has a specification defined as follows <number of bits><parity><stop bits>. So, for example an 8 bit, No parity, 1 stop bit specification would be given as 8N1. The idle state is high, and after the stop bit, the line is shown as going low, in fact that only happens when another data word is coming. If the data transmission has finished, then the line will go high ('idle') again.

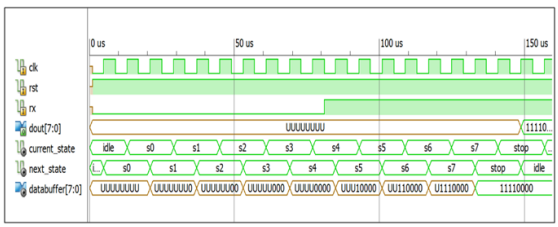

Fig. 4. Simulation of Basic Serial Receiver using ISim

The Vehicle tracking system can be demonstrated by a prototype (Remotely controlled car) designed using FPGA. The simulation results in Fig 5 show how a DC motor can be controlled and made to rotate in clockwise/anticlockwise direction using FPGA. In a similar fashion the rotation of all motors used in the prototype can be controlled to achieve correct movement of the car.

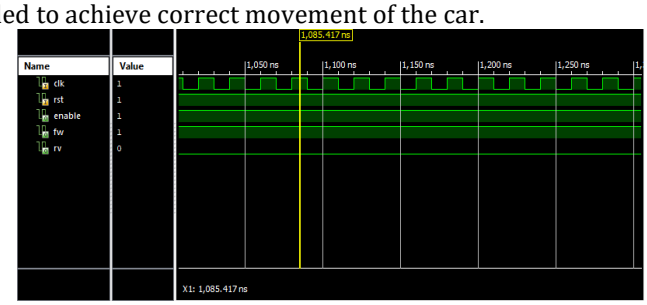

Fig. 5. Simulation of DC motor made to rotate in the clockwise direction

Block RAM can be used to store data using FPGA. Fig 6 shows implementation of a dual port block RAM created to store 8 characters where character 'A'(binary form: 01000001) is stored in the first location(000) of the RAM.

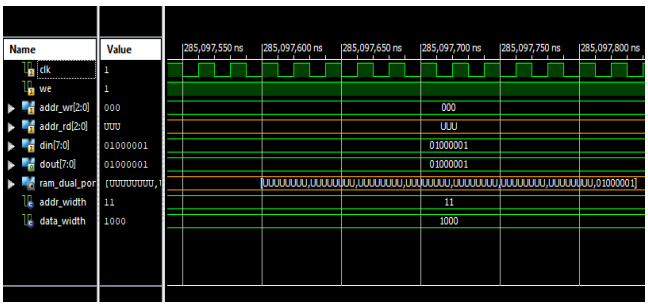

Fig. 6. Simulation of Dual port RAM to store character 'A'

In order to track and view the vehicle position on a map,
Blynk app also has been used along with NodeMC module and its implementation is as shown.

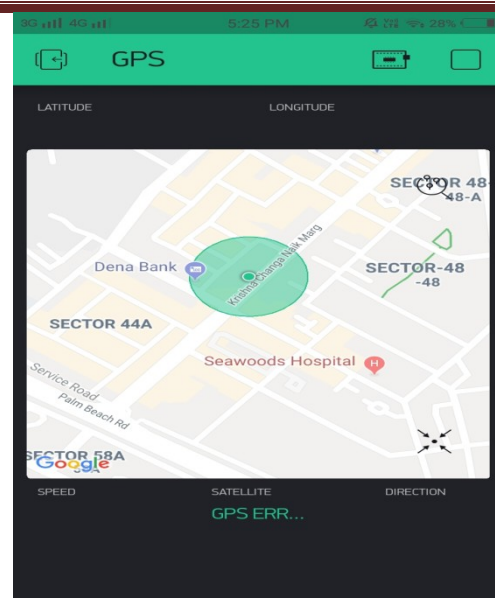

Fig. 7. Tracking the location using Blynk App.

I. FUTURE SCOPE

i. The EEPROM can be used to store the previous Navigating positions .
ii. A database can be created using the FPGA for storing the address information corresponding to different locations indicated by GPS, which can further be accessed via Google Maps .
iii. More features like fuel detection, brake control, providing overspeeding alerts,etc can be added.
iv. Face recognition feature can also be added to the system for surveillance and theft detection purpose.

II. CONCLUSION

i. Vehicle tracking both in case of personal as well as business purpose improves safety and security, enables performance monitoring and increases productivity. Many of recent applications developed like OLA, Uber ,etc also make use of similar systems .So in the coming years, it is going to play a major role in our day-to-day living.
ii. The complex programmable logic device or CPLD, was the forerunner of the FPGA and if you need just a little logic the CPLD can be a less expensive option to implement the system.
iii. FPGAs are highly flexible general purpose digital logic devices and the use of it helps us to make the system more manageable.
iv. Also, as it is not very easy to program the FPGA, using FPGA in such systems proves to be more secure compared to use of embedded systems.

III. ACKNOWLEDGEMENTS

We would like to sincerely thank the following for their kind support and technical guidance.
i. Mrs. Sneha Revankar- Professor (EXTC Department), FCRIT, Vashi.

IV. REFERENCES

[1] FPGA Based Vehicle Tracking and Accident Warning using GPS .(International Journal of Scientific & Engineering Research, Volume 5, Issue 2, February-2014).
[2] Wireless System for Vehicle Accident Detection and Reporting using Accelerometer and GPS(International Journal of Scientific & Engineering Research, Volume 6, Issue 8, August-2015)
[3] FPGA Based Vehicle Tracking and Accident Warning using GPS(International Journal of Scientific & Engineering Research, Volume 5, Issue 2, February-2014).
[4] Design Recipes for FPGA by Peter Wilson.
[5] DC Motor Speed Control using LabVIEW FPGA Modeling, Control Algorithm Simulation & Implementation (IJSRD - International Journal for Scientific Research & Development| Vol. 3, Issue 05, 2015).
[6] FPGA Designs with VHDL: Dual Port RAM : https://vhdlguide.readthedocs.io/en/latest/vhdl/dex.html#dual-port-ram

e ISSN 2348 –1269, Print ISSN 2349-5138
Marathwada Mitra Mandal, Pune

"Smart USB Cable"

Ms. Kajal P Ramteke[1], Ms. Yogita B Gaikwad[2] , Ms. Pooja D Khairnar[3], Prof. P. R. Shah[4]
[1,2,3]BE Student, JSPM's BSITOR, Wagholi, Department of Electronics & Telecommunication Engineering, India
[4]Assistant Professor, JSPM's BSIOTR, Wagholi, Department of Electronics & Telecommunication Engineering, India

ABSTRACT: *Present paper discusses the Smart USB Cable occurrence & its relevant parameters in colour of changing cable. In the proposed system its being visualize the different colour changing of the cable as per the charging of Cell phone .The Cable is operated with the adapter along with switched mode power supply.The ESP8266 Controller will help to control the charging & WIFI controlled device. Switch-mode power supplies are a popular and sometimes necessary choice for DC-DC power conversion.This system helps to avoid the over current & over voltage charging of cell Phone. This cable will visualize the changing of cable colour with charging of cell Phone.*

Keywords: *ESP8266 controller IC, Colour Code ,WIFI controlled device, Switched Mode Power Supply, LED Wire, USB, LED driver circuit*

1. Introduction

Internet of Things (IoT) conceptualizes the idea of remotely connecting and monitoring real world objects (things) through the Internet . When it comes to our house, this concept can be aptly incorporated to make it smarter, safer and automated. This project focuses on building a smart USB cable & smart wireless home security system which sends alerts to the owner by using Internet in case of any trespass and raises an alarm optionally.The leverage obtained by prefering this system over the similar kinds of existing systems is that the alerts and the status sent by the wifi connected microcontroller managed system can be received by the user on his phone from any distance irrespective of whether his mobile phone is connected to the internet. The microcontroller used in the current prototype is the ESP8266 & Node MCU v2 Launchpad board which comes with an embedded micro-controller and an onboard Wi-Fi shield making use of which elctrical appliances inside the home can be controlled and managed. The charging cable monitoring, as a tool for checking the colour coding of cable as per the charging of cell phones. It mandatory to overcome the over voltage & over current in the circuit. A mobile battery charger circuit is a device that can automatically recharge a mobile phone's battery when the power in it gets low. Nowadays mobile phones have become an integral part of everyone's life and hence require frequent charging of battery owing to longer duration usage.

Battery chargers come as simple, trickle, timer based, intelligent, universal battery charger-analyzers, fast, pulse, inductive, USB based, solar chargers and motion powered chargers. These battery chargers also vary depending on the applications like mobile phone charger, battery charger for vehicles, electric vehicle batteries chargers and charge stations.

Charging methods are classified into two categories: fast charge method and slow charge method. Fast charge is a system used to recharge a battery in about two hours or less than this, and the slow charge is a system used to recharge a battery throughout the night. Slow charging is advantageous as it does not require any charge detection circuit. Moreover, it is cheap as well. The only drawback of this charging system is that it takes maximum time to recharge a battery.

2. Process Development

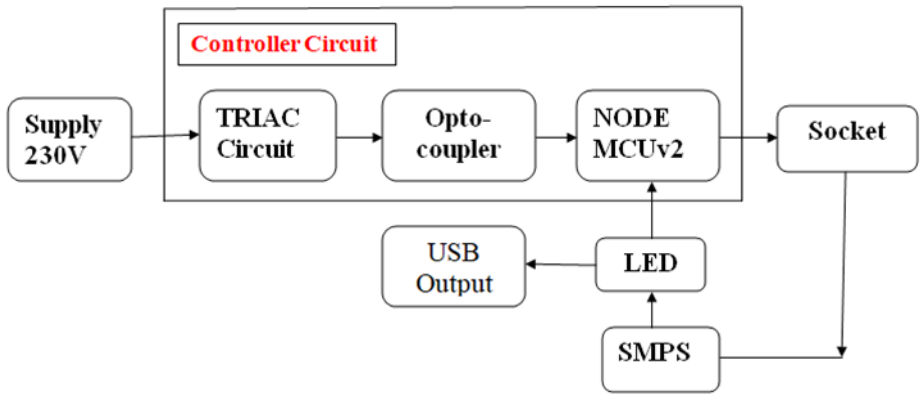

Fig: Block diagram of Smart USB cable.

The above proposed system of the Changing colour USB as per the charging of cell phones.
For this whole proposed system the different components are used as;
Smart socket, Switching TRIAC/Relay , 220V AC supply, SMPS,USB cable, Controller.

Operation

The proposed system is controlled with the adapter, the adapter is design which is used to control the voltage conversion of supply. From the switching board the AC 220v supply is provided, which is then given to the switching TRIAC/Relay. Switching TRIAC/Relay is solid state relay which acts as an AC switch. It is the bidirectional power switching device. TRIAC triggered into conduction by both positive & negative trigger pulse applied to its gate & made gate controlled device. Hence between the supply & switching TRIAC the switched mode power supply is used. Switched mode power sully is generally called as the SMPS. Switched mode power supply converts the power using switching devices that are turned ON & OFF at high frequencies. Switching supply having high efficiency & are widely used in the variety of electronic equipment. SMPS is used to regulate the power dissipation & efficiency problem by operating via pulse width modulation (PWM) .Hence the SMPS is then connected to the USB output i.e. USB cable 3.0. USB is the universal serial bus interface which enables communication between devices & host controller.USB provides the current upto 1500 mA i.e. 1.5 Ampere. The whole device is controlled with the controller IC which is ESP8266 controller IC. ESP8266 is WIFI controlled microcontroller IC. ESP8266 is the low cost WIFI microchip with full TCP/IP stack & microcontroller. ESP8266 is the 16 GPIO pin IC with SPI, I2C, I2S, UART enabling& 10 bit ADC controller IC. Hence when the supply is started the 220V is converted to 12V in the adapter & with SMPS it is then provided 2.5 V supply to the USB port minimally. As the charging goes on increasing the colour of the USB cable get changed as when charging is below 20 % then USB will be RED coloured ,similarly when charging is in between 20% to 80% then cable will be YELLOW coloured & when the charging will be above 80% then cable will be RED coloured . As the charging becomes 100 % the charging process will stop & the buzzer will tuned & the switch will be getting automatically OFF respectively.

3. Development

NodeMCUv2

The ESP8266 is the name of a micro controller designed by Espressif Systems. The ESP8266 itself is a self-contained WiFi networking solution offering as a bridge from existing micro controller to WiFi and is also capable of running self-contained applications. This module comes with a built in USB connector and a rich assortment of pin-outs. With a micro USB cable, you can connect NodeMCU devkit to your laptop and flash it without any trouble, just like Arduino. It is also immediately breadboard friendly The NodeMcu is an open-source firmware and development kit that helps you to Prototype your IOT product within a few Lua script lines.

- **Features**
  - Open-source
  - •Interactive

e ISSN 2348 –1269, Print ISSN 2349-5138
Marathwada Mitra Mandal, Pune

- Programmable
- Low cost
- Simple
- Smart
- WI-FI enabled
- Specification:
- Voltage:3.3V.
- Wi-Fi Direct (P2P), soft-AP.
- Current consumption: 10uA~170mA.
- Flash memory attachable: 16MB max (512K normal).
- Integrated TCP/IP protocol stack.
- Processor speed: 80~160MHz.
- RAM: 32K + 80K.
- GPIOs: 17 (multiplexed with other functions).
- Analog to Digital: 1 input with 1024 step resolution.
- +19.5dBm output power in 802.11b mode
- 802.11 support: b/g/n.
- Maximum concurrent TCP connections: 5.

Why flashing your ESP8266 module with NodeMCU?
NodeMCU is a firmware that allows you to program the ESP8266 modules with LUA script. And you'll find it very similar to the way you program your Arduino. With just a few lines of code you can establish a WiFi connection, control the ESP8266 GPIOs, turning your ESP8266 into a web server and a lot more.

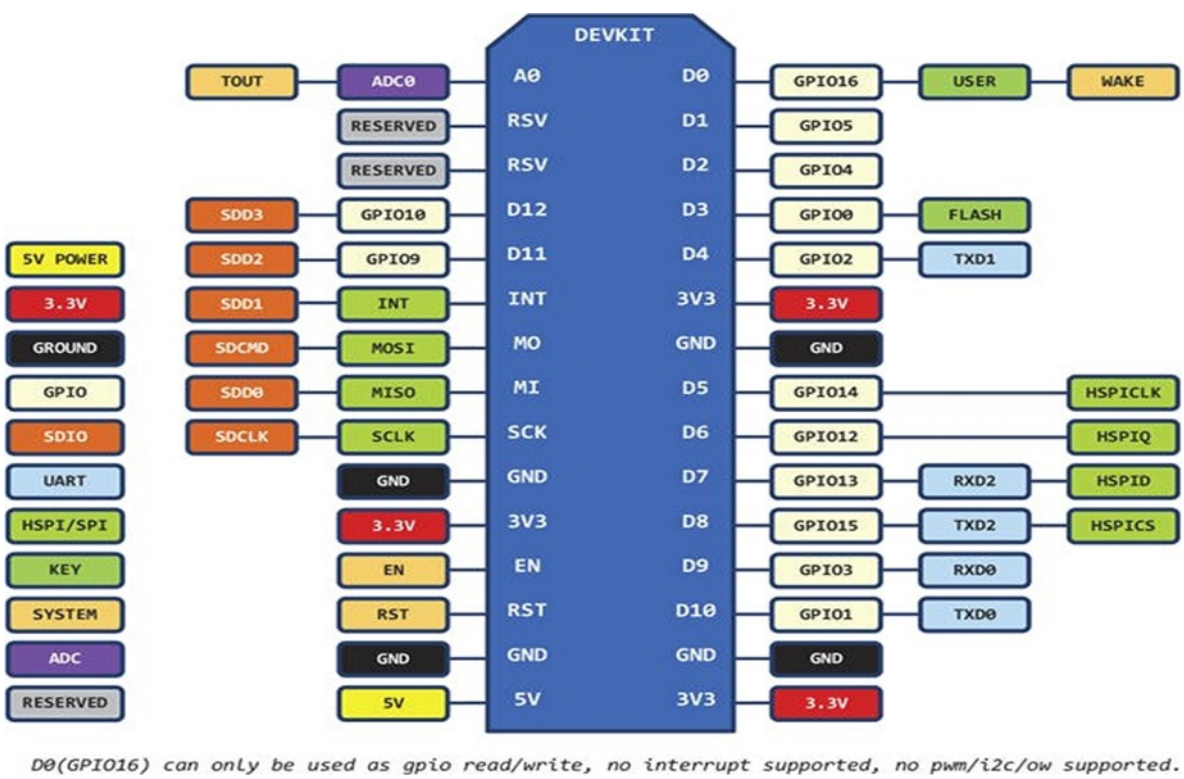

Fig 8: Pin diagram of NODE MCU v2

Pin description
The GPIO's shown in blue box (1, 3, 9, 10) are mostly not used for GPIO purpose on Dev Kit. ESP8266 is a system on a chip (SoC) design with components like the processor chip. The processor has around 16 GPIO lines, some of which are used internally to interface with other components of the SoC, like flash memory.

Since several lines are used internally within the ESP8266 SoC, we have about 11 GPIO pins remaining for GPIO purpose.Now again 2 pins out of 11 are generally reserved for RX and TX in order to communicate with a host PC from which compiled object code is downloaded.Hence finally, this leaves just 9 general purpose I/O pins i.e. D0 to D8. As shown in above figure of NodeMCU Dev Kit. Note that D0/GPIO16 pin can be only used as GPIO read/write, no special functions are supported on it

We can see RX, TX, SD2, SD3 pins are not mostly used as GPIOs since they are used for other internal process. But we can try with SD3 (D12) pin which mostly like to respond for GPIO/PWM/interrupt like function.

4. LED driver circuit

LED is recognized as the fourth generation of green light source. It is a solid cold light source. It has many advantages, such as high efficiency, long life, safe and environmental protection, small size, high reliability, fast response speed and so on. At present, the same lighting effect is achieved. The power consumption of LED is about 1/10 of incandescent lamp and 1/2 of fluorescent lamp. Many countries and regions have introduced a variety of policies to support the development of the LED industry, so that the industry can become an important part of the country's important industries, giving birth to huge business opportunities. LED driver circuit is very important for LED, while LED dimming control can save energy. The driving and dimming of high brightness white LED are hot topics in recent years.

What is a LED Driver:

Led driver changes the power supply to a specific voltage current to drive the LED voltage converter. In general, the input of the LED driver includes the high voltage power frequency AC (i.e., the city electricity), the low voltage DC, the high voltage DC, the low voltage and high frequency AC (such as the output of the electronic transformer). The output of LED driver power is mostly a constant current source that can change voltage with the change of LED forward voltage drop. The core components of LED power supply include switch controller, inductor, switch component (MOSFET), feedback resistor, input filter device, output filter and so on. According to the requirements of different occasions, there must be input over-voltage protection circuit, input under-voltage protection circuit, LED open circuit protection, over-current protection circuit and so on.

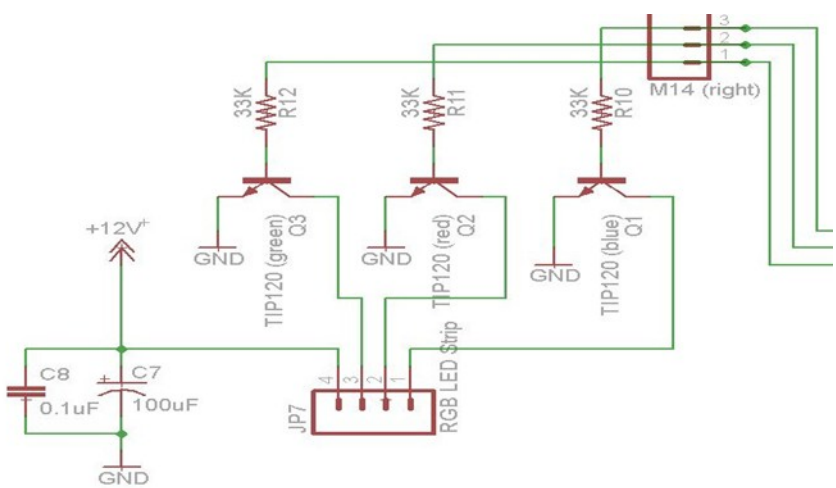

Fig: LED driver circuit

The LED driver circuit uses the switching power supply as the first level of control, the pressure control constant current source as the second level of control, combined with the advantages of the two, the efficiency and control precision are guaranteed, and can be directly supplied by the city electricity, two level drive, high safety, and can not easily damage the high price LED lamp. Experiments show that the efficiency of the system can reach more than 83%, and the power is the same as the single ended flyback switching power supply, so it is worth promoting.

e ISSN 2348 –1269, Print ISSN 2349-5138
Marathwada Mitra Mandal, Pune

5. Experimental Model

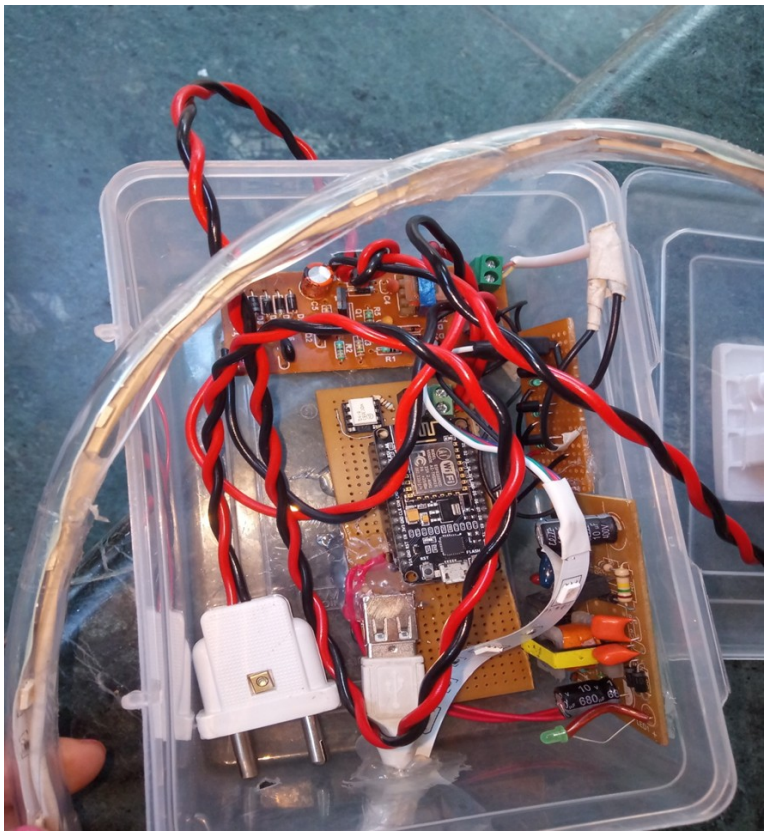

Fig: Smart USB cable

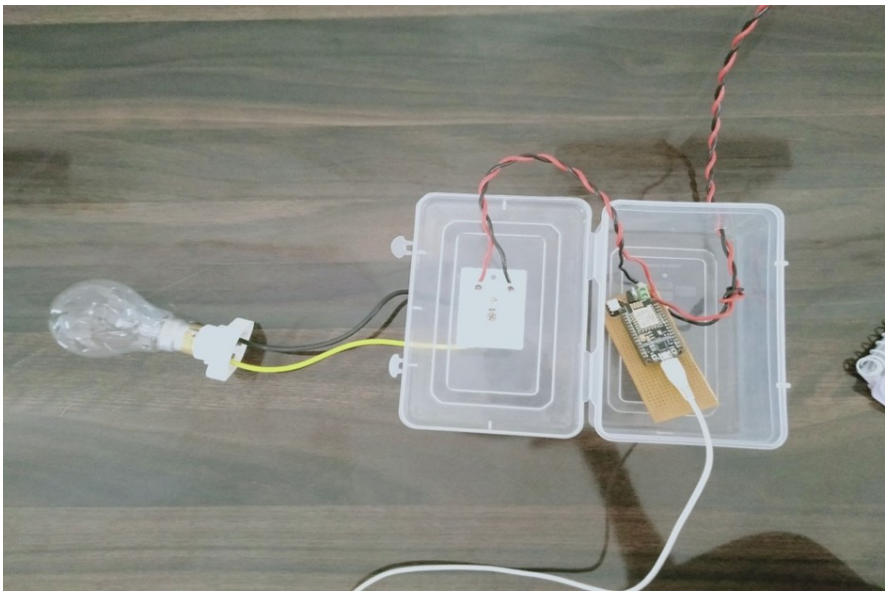

Fig: When switch is OFF (the command given from remote controller)

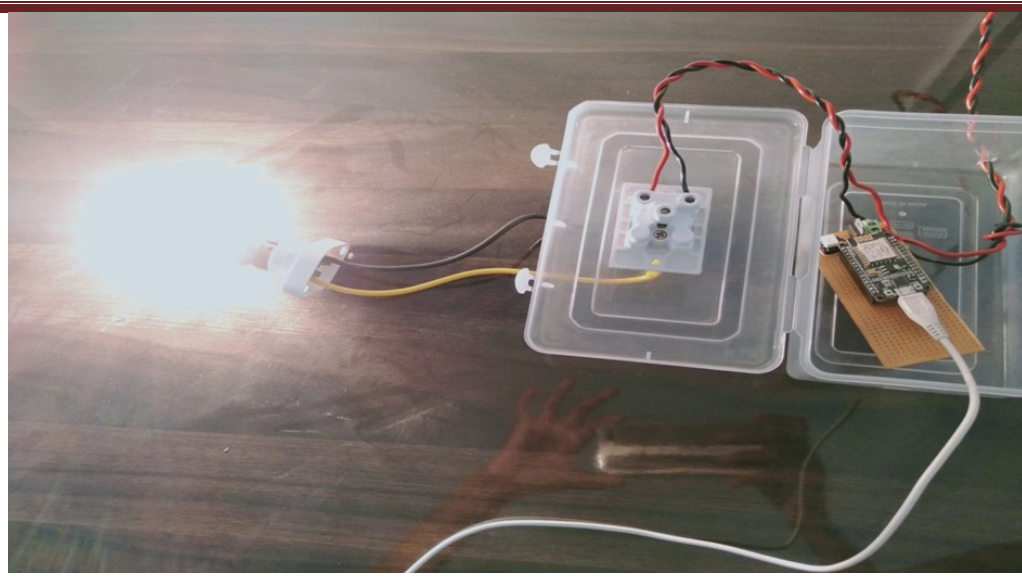

Fig: When switch is ON(the command given from remote controller)

6. Conclusion

This paper elaborates the design and construction of Smart USB cable. Circuit works properly to change in colour of cable as per charging of mobile & automatic turn ON/OFF of the electrical device. After designing the circuit which changes the colour of USB cabe as prer charging of mobile is illustrated in the previous sections. NODE MCU v2, LED driver crcuit & Switched mode power supply are main section in working the circuit.

If above designed section have satisfied then circuit will do the desired work according to specific program. Each sensor controls the turning ON or OFF the lighting column. This project have been successfully controlled by NODE MCU v2 microcontroller. With commands from the controller & desgined mobile application the cable work successfully. Furthermore the drawback of the Smart USB cable is it needed designed applications to work as per above cable is designed. Hence the smart USB cable is designed successfully for the changing colour of the cable as per the charging of cell phones. It's being helpful to avoid the over current & over voltage in the circuit. The cable is flexible & reliable to use.

References

1. Krishna Prasad Pujapanda, " LiFi integrated to power lines for smart Illumination cum communication", 2013 International Conference on communication Systems and Network Technologies,2013 IEEE
2. https://www.researchgate.net/publication/326701549_A_Working_Model_for_Mobile_Charging_using_Wireless_Power_Transmission
3. Swathi Nallapati, Dr. S. Balaji, Haritha Thummala, "Introduction to Wireless USB Flash Devices",International Journal of Engineering Trends and Technology (IJETT) - Volume4Issue4- April 2013
4. https://www.electronicshub.org/230v-led-driver-circuit
5. https://www.elprocus.com/mobile-battery-charger-circuit-and-working-principle
6. Mahid Mahidpour, Asghar Akbari, Peter werle , "Charge concept in partial discharge in power cable", IEEE Transactions on Dielectrics and Electrical Insulation Vol. 24, No. 2; April 2017

e ISSN 2348 –1269, Print ISSN 2349-5138
Marathwada Mitra Mandal, Pune

IOT Based Bridge Condition Monitoring System

Abhishek Girigosavi, Ashwini Jalgi, Rohit Kotgire, Prof. Sampada Tavse
Dept. of E & TC,
Marathwada Mitramandal's College of Engineering,
Pune, India

ABSTRACT: *Advancement in technology have led us to the automated real-time structural health monitoring systems. In Japan and Korea many structures have implemented this systems of real-time health monitoring. However, current technologies use complicated and high capital network of sensors and high cost OFC between bridge and control centres, which increases the cost for installation and maintenance of monitoring system. The complicated wiring also makes difficult the process of finding faults, repair or replace. Here we are testing a new idea of bridge health monitoring using GSM (long distance communication of data between bridge and control centre) data communication is tested.*

Keywords: *OFC (Optical Fibre Cable), GSM (Global System for Mobile Communication), sensors.*

1. Introduction

The Akashi Kaikyo Bridge in Japan known by longest suspension bridge as well as by its monitoring and maintenance system called MBM (Monitoring Based Maintenance) which helps bridge engineers to monitor real time condition of the bridge. Various sensors are installed at main cables, hangers, Decks and towers etc. The values from these sensors will represent the bridge condition against vibrations and seismic load. Sensor technologies have made the monitoring system more Accurate and fast. To send data to the remote location where maintenance office is located, GSM technology can be used. However, regardless the advancements in technology, one thing has not been changed which is data communication through wires and cables. The data will be transferred wirelessly helping the authors to form a wireless network of sensors for monitoring system. In this research, sensors such as temperature sensor, strain gauge, accelerometer, vibration sensor and GSM are combined forming the u-node where "u" represents ubiquitous. This system will be IOT enabled which will help us to control and monitor from anywhere remotely

2. Motivation

As there are deteriorations and degradations in the structures of bridge over time, it can cost into property and human loss. Traditional methods of inspecting health of structures cannot detect upcoming disasters every time. This loss of human and property can be avoided by designing an automated monitoring system. In this system we can monitor the structural health continuously and develop an early warning system. Here by using IOT we can enable system to be monitored and controlled remotely from anywhere.

3. Litrature Survey

Konkan Railway Corporation Ltd. has developed an equipment for health monitoring named as BRIMOS recorder. This device records vibrations in the structure and gives a frequency plot output (vibration signatures). Bridge engineer's efforts resulted into a device or a tool which alerts earlier regarding a pending inspection to them with respective of an indicative parameter.

Konkan Railway developed this system in association with an Austrian company namely BRIMOS recorder. It is a lightweight portable device weighing about 16.5 kgs which can be moved easily from bridge to bridge to carry out the recordings.

Its all elastic members will vibrate with specific natural frequencies. Their stiffness's is represented by these natural frequencies. The lower shift in spectrum of vibration signatures represents reduction in stiffness of material. The engineers can detect easily the reduction in stiffness of any member's material over a period of time.

The device easy to use. We can make use of its levelling screw and setup the device anywhere easily for example on footpath of the bridge. This device can store up to 40 entries of recordings, time taken for each recording is 5 minutes.

The data is transferred in the form of values as well as plots, graphs, for future analysis and reference.

4. Technology

Development of end node (Sensor + GSM module). The output data from the sensors are voltage, or resistance, or pulse according to the type of sensors. The sensory outputs are in analogue form data which should be converted into digital form. An analogue to digital converter for each type of sensor is used in this research work. Thus, the analogue to digital converter reads analogue data from the sensor and provide the data to the GSM module which sends the data to the controlling centre wirelessly. A sensor module with the A-D converter and GSM module is called end node. Development of end node, the term end node is a combination of the wireless communication network and sensors. Communication network sends sensor data wirelessly. Accelerometer sensor can measure the tilt of surface where it is mounted. For measuring temperature here we are using thermometer DHT11 sensor. The strain is measured using load cell here, it will convert force into electrical signal. Vibration sensor is used here to measure vibrations in structure of bridge.

5. System Design

5.1 Block diagram

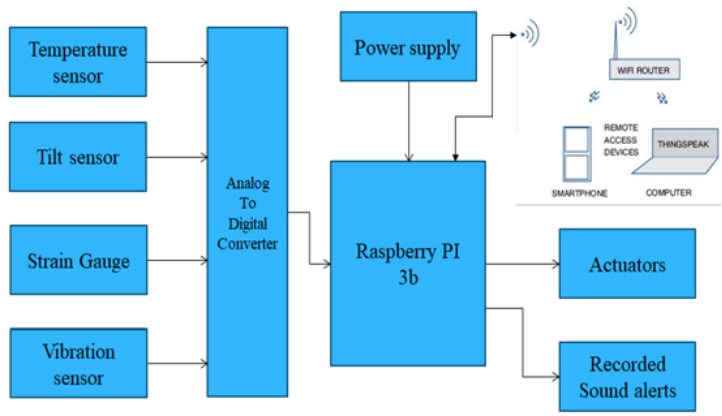

Fig 5.1: IOT based bridge condition monitoring

5.2 Strain Gauge

The strain gauge here will be deformed by force being sensed through its mechanical arrangement. The strain gauge will convert this deformation (strain) into an electrical signal, such as effective electrical resistance of the wire will change due to strain. A load cell is a transducer which converts a mechanical force into electrical signal.

5.3 Accelerometer

Accelerometer measures static as well as dynamic acceleration in all three axis. Accelerometer sensor measures tilt of the surface, this enables us to measure acceleration or deceleration of any object like buildings, bridges. Accelerometer is used here to measure changes in the tilt of bridge.

5.4 Thermometer

In this system we are using DHT11 thermometer which is an integrated circuit precision temperature sensor, its output voltage represent Celsius temperature as in linear proportion. It will read 10millivolt = 1cnt. For example if the room temperature is 35 deg the generated output will be 350 millivolt and after A-DC the count will be 35.

5.5 Microcontroller

In this project raspberry pi 3b+ is used here as a processing unit or controller board. Raspberry pi 3b+ uses Broadcom BCM2837B0 processor at clock speed 1.4GHz. It has a dual band wireless LAN, Giga Ethernet speeds up to 300Mb/s using USB 2.0, four USB 2.0 port. It has extended 40-pin GPIO (General Purpose Input Output) header, HDMI video output and it comes with 1GB SDRAM memory for faster processing.

5.6 Cloud monitoring

Here in this system we are proposing the data to be monitored over cloud platform. Sensor values will be continuously sent over the cloud database, representation of the data will be in values as well as in graphical form which will make it easy for engineers or authorities to analyse the conditions. The sensor values which will represent current condition of bridge at that time can be monitored from anywhere using internet connectivity.

5.7 Actuators

In extreme overload or disaster conditions actuators will stop the further loading of bridge. Actuators like servo motors can close the gates of bridge for further use so overloading can be avoided. Controlling authorities or engineers can also use the actuators to close the bridge for maintenance or emergency situation which will help them to stop the structure from degradation.

5.8 Recorded sound alerts

Here using the controller in this system, the recorded sound alerts will be used to alert personnel using bridge in the case of emergency. And bridge can be evacuated by conveying the emergency situation through recorded sound alerts on speakers.

5.9 GSM

GSM is a communication standard set used for wireless communication, it is developed by European Telecommunication Standard institute.

This GSM can use any operator sim card and will act as a phone with sim in it. Its RS232 port can be used for serial communication and for embedded applications. It provides applications such as data transfer and logging, remote control, SMS. It can be connected directly to any microcontroller or through serial port pc. It is used to make and receive calls, send/receive SMS, connect to internet using GPRS. This GSM modem is a highly flexible plug and play quad band sim900 GSM modem. We are using SIM900 GSM modem in our system.

6. Applications

1. It is used to find out the mechanical strain on the bridge.
2. It can measure the tilt in bridge.
3. It is used to read ambient temperature.
4. It can be used for structural health, bridge safety, damage detection.
5. It can avoid accidents caused by the extreme weather conditions.
6. It is useful for monitoring the faults of bridge occurred.

7. Conclusion

A system is developed in which continuous monitoring of structural health is done remotely by concurrent deployment of sensors. The data is transferred wirelessly by serial communication overcoming the shorts in cable connected systems. This end sensors provide engineers capabilities like low cost maintenance, remote monitoring and controlling over a long time of period.

8. References

1. Chae, M.J.Ph.D, P.E.Kim, Yoo H.S.J.R. Cho, M.Y, Ph. D.”Bridge condition monitoring system using wireless network (cdma and ZigBee)”.
2. https://www.spiedigitallibrary.org/conference-proceedings-of-spie/6530/65300H/Development-of-a-wireless-bridge-monitoring-system-for-condition-assessment/10.1117/12.715905.short?SSO=1 Downloaded on 4th march 2019
3. K.Fathima, K.Shanmugavalli, International Journal of Emerging Science and Engineering (IJESE), Dec2013
4. G. Lederman, Z. Wang, J. Bielak, H. Noh, J. H. Garrett, S. Chen, J. Kovaèeviæ, F. Cerda, and P.Rizzo, "Damage quantification and localization algorithms for indirect SHM of bridges.
5. S. Chen, A. Sandryhaila, J.M.F. Moura and J. Kovačević, "Adaptive Graph Filtering: Multiresolution Classification on Graphs" Proc. IEEE Glob. Conf. Signal Information Processing, Austin, TX, Dec. 2013
6. http://jelena.ece.cmu.edu/repository/conferences/13_05_SturctCongress.pdf Downloaded on 4th march 2019

IOT Based Tire Pressure Monitoring, Vehicle Parameter Monitoring and Vehicle Security

Rushabh Surana, Udayan Bhide, Pradip Yadav, Prof. Snehal Koparde
Marathwada Mitra Mandal's College of Engineering,
Karvenagar, Pune, India

ABSTRACT: *IOT is a system consist of different devices which can be mechanical, electrical, electronic which constantly communicate data with main processor and processor does different work on data such as computing, monitoring, providing data to perform some task. The things can be table, chair, trees, cars, mobile phones, cars, bikes, weather, etc. The main aim of this research is to monitor the tyre pressure and provide the data related to that to user and also to provide vehicle security using fingerprint, checking seat belt status, fuel leakage and also alcohol taken by driver to avoid accidents.*

Keywords: *Internet of things, NODEMCU, fingerprint sensor, MQ3 alcohol gas sensor, limit switch, pressure sensor.*

1. Introduction

As technology is advancing the demand for intelligent vehicle system is increasing. Tyre pressure monitoring is used to monitor the air pressure inside pneumatic tyres of different vehicles. Tyre pressure monitoring system gives real time pressure information with the help of android application. Tyre pressure monitoring system can be of two types i.e. direct TPSM and indirect TPSM. In indirect TPSM physical pressure sensor is not used to measure the tyre pressure but pressure is determined by monitoring individual tyre rotational speed. In direct TPSM pressure sensor is mounted on individual tyre, this sensor gives tyre pressure information to driver using android application on mobile phone. By using TPSM driver and passenger's safety improves as TPSM monitors the pressure of tyre and reports it to driver so that driver can take measure to prevent bursting of tyre and accidents due to it. Nearly 15% of accidents occur due to wrong tyre pressure. We are also providing vehicle security with the help of biometric fingerprint, checking seat belt status, is any fuel leakage and also is driver drunk. To avoid vehicle theft we are using biometric fingerprint so that any one cannot start vehicle. If any of parameter goes wrong vehicle will not start and alert related to that will be given.

2. Methodology

The main aim of this system isto avoid the accidents due to tyre bursting, fuel leakage, driving after drinking. Also to avoid vehicle thieving by using biometric fingerprint. In this project we are interfacing different sensors and monitoring data and using data for providing security.The system consist of two NODEMCU's which will act as heart of the system. In this system we are using client server communication. First NODEMCU will act as server and other will act as client. Fingerprint sensor is interfaced with NODEMCU which will act as authentication point to turn on vehicle. Firstly when system gets turn on it will ask for valid fingerprint if valid fingerprint is given then only it will proceed for checking other parameters. It will check for seat belt status, fuel leakage, alcohol test. Other NODEMCU then gets connected to first one wirelessly to send data related to tyre pressure. If all parameters are correct then and only then vehicle will start. If key is in ON position then also vehicle will not start without valid fingerprint.

NODEMCU
Pressure Sensor
Power supply

Fig 1: Block diagram for proposed system

3. Component Description

3.1 NODEMCU

NODEMCU is open source platform for IOT. NODEMCU has a firmware running on ESP8266 WI-FI SoC from Espressif system itself. It is a programmable Wi-Fi module. It can be programmed with Arduino UNO. It has 10 GPIO pins

e ISSN 2348 –1269, Print ISSN 2349-5138
Marathwada Mitra Mandal, Pune

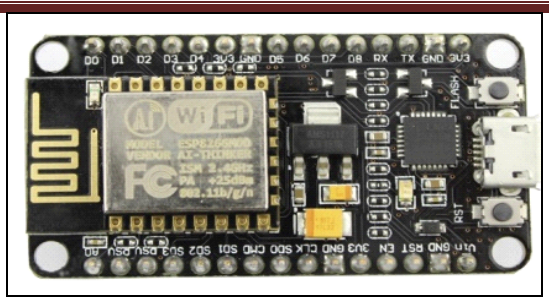

Fig 2: NODEMCU

3.2 R305 fingerprint module

R305 is a optical biometric fingerprint sensor. The fingerprint data can be stored in the module itself by user and can be configured as 1:1 or 1:N mode for identification. It can be interfaced with 3.3V or 5Vcontroller.

Fig 3: R305 fingerprint sensor

3.3 MQ3 alcohol gas sensor

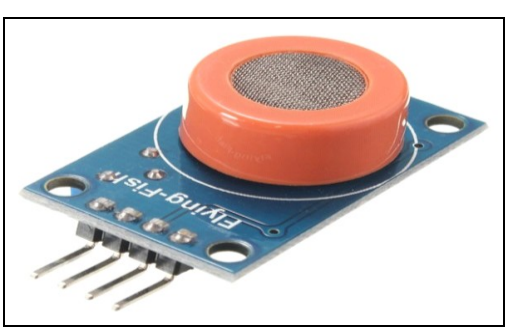

Fig 4: MQ3 alcohol gas sensor

This is alcohol gas sensor. It is a semiconductor device that detects presence of alcohol gas in the concentration 0.05mgl to 10mgl. It can provide both digital and analog output. It has a high sensitivity and good response time.

3.4 Smartec Pressure sensor

It can measure guage or absolute pressure. It has amplifies analog output. It can measure pressure up to 1bar. It is used in portable gauges.

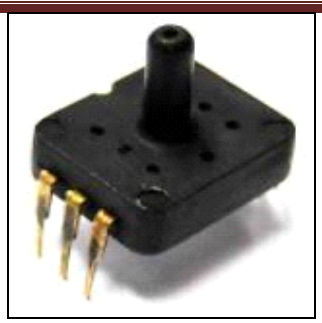

Fig 5: spd015G pressure sensor

3.5 Limit switch

For conformation of seat belt is closed limit switch is used.

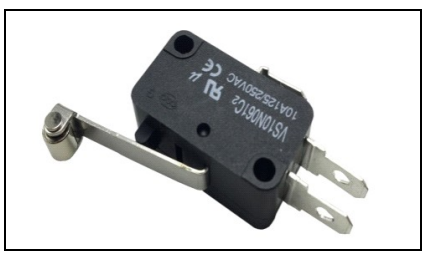

Fig 6: limit switch

4. Flow of Operation

start

Fig. 7: Flow Chart

6. Proposed System

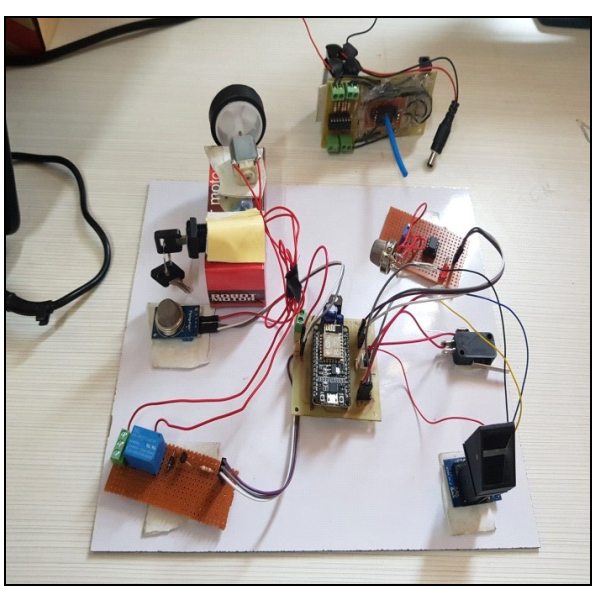

Fig. No. 8: Proposed System

e ISSN 2348 –1269, Print ISSN 2349-5138
Marathwada Mitra Mandal, Pune

8. Calculation part

In this system alcohol gas sensor is used which gives analog output and also NODEMCU has 10 bit ADC. Hence 2^10=1024 due to this we have plotted values of this sensor between 0-100. That means 1024 is nothing but 100 and 0 will be considered as 0 and 512 is considered as 50. In this way all values are mapped so that it is easily understood. Also tyre pressure sensor is a sensor whose output is analog so to convert analog value in terms of pressure we have used a factor 0.0708.

9. Conclusion

This system provides real time tyre pressure and also alerts driver about improperly inflated tyres by displaying pressure on app. This system increases tyre life. And also reduces accidents due to bursting of tyres or puncture in tyre and driving after drinking.

10. References

1. A new intelligent tyre pressure monitoring system by-IEEE zhipingjiang
2. Tyre pressure monitoring system using wireless communication-IJSRMS
3. IOT based vehicle monitoring system-IJATES
4. Real time biometric based vehicle security system with GPS and GSM technology-Elsevier
5. Biometric vehicle security system and pollution monitoring-IRJET
6. Vehicle security using Biometric finger print using GSM and SMS alerts-IJERECE

"Air Pollution Monitoring System Using Lab View"

Pravin Dukare, Pratiksha Baglane, Mohini Baglane, Prof. Vasant Deokamble
B.E. Student,
Marathwada Mitra Mandal's College Of Engineering,
Karvenagar, Pune, India

ABSTRACT: *This project is based on LabVIEW Software which helps to monitor the air impurity in the environment. Air pollution is one of the most key factor affecting life and health of humans, animals and plants. In this project, sensors are used for monitoring the level of Carbon Monoxide (CO) and Carbon Dioxide (CO_2) etc. Air pollution monitoring system allows measurement of levels of CO and CO_2, by using LabVIEW Software. The experimental results demonstrates the efficiency of our project in terms of fast detection and real time response.*

Keywords: *Lab View, Air Pollution.*

1. Introduction

This Project is about monitoring the Air Pollution using LabVIEW Software. In today's life Air impurity is a big concern. We detect toxic air, (with the help of Gas Sensors, In this project we use gas sensors like MQ-7 Sensor to measure level of CO and MQ-4 Sensor to measure level of CO_2 .The main part of our system is USB 6008 from National Instrument, which is used for DAQ purpose. It supports multiple functions. The level of gases is indicated on LabVIEW Software. Objective of the project, to observe the level of particulate matter in the air for further action like alarming or controlling.

- **BLOCK DIAGRAM**

Physical system

Sensor 1

Sensor 2

DAQ

PC

Lab View

Fig no.1 Block Diagram

[2] The fig no.1 shows pollution monitor unit consist of sensors, data acquisition unit & system with Lab View.
The block diagram consist of two sensors for sensing polluting gases like carbon dioxide and carbon monoxide. The output of sensor unit is given to the data acquisition unit (DAQ)
CO is a uncolored and inodorous compound produced by imperfect combustion of carbon-containing materials. In other words carbon monoxide is also called as silently killer because without using detection technique the detection of carbon monoxide is not possible. The study taken by Underwriters Lab the 60% of people was not identify the any signs of a Carbon monoxide which was leaking in the home. Raised levels of CO is dangerous to people & it depend on the amount percentage and period of exposure. Smaller collection of CO can be dangerous to humans and it causes symptoms like weakness, dizziness, vomiting, shortness of breath etc. But if there is higher concentration of CO is present it causes vertigo, intoxication, atasia, conscious and even death.

e ISSN 2348 –1269, Print ISSN 2349-5138
Marathwada Mitra Mandal, Pune

3) Design and Implementation

Hardware

1) CO Sensor (MQ-7):

This sensor iss used for sensing CO concentration from 20--2000 ppm. The output of sensor is in the form of analog resistance.

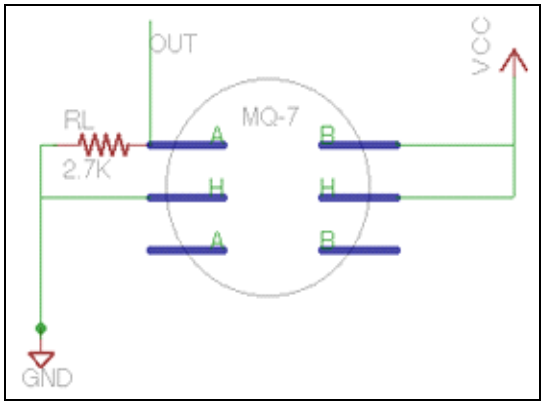

Fig no. 2 CO Sensor (MQ-7)

Specification

- Circuit voltage: 5V±0.1
- Heating voltage (high): 5V±0.1
- Heating voltage (low): 1.4V±0.1
- Heating resistance: 33Ω±5%
- Heating time (high): 60±1 seconds
- Heating time (low): 90±1 seconds
- Using temperature: -20°C-50°C

2) Carbon-Dioxide Sensor (MQ-4)

[2]This is carbon dioxide sensor (MQ-4) suitable for sensing CO_2 concentrations. Carbon dioxide is a hazardous gas. The suitable material used in MQ-4 gas sensor is cassiterite (SnO_2) which has low conductivity in clear air.

It make detection by technique of cycle high & low temperature and detect CO_2 when low temperature. The conductivity of sensor is gets higher with the increasing gas concentration. When there is high temperature it detects Methane propane etc. Combustible gases and the other gas absorbed under temperature.

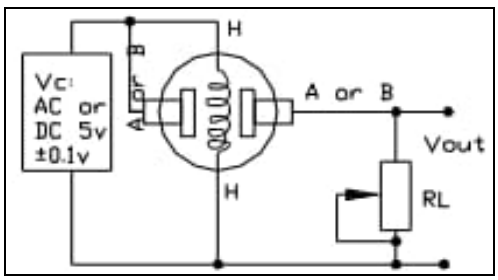

Fig no.3 circuit diagram of MQ-4 sensor

Specification

- Power requirements:VCC-5V±0.1
- output: digital 0 & 1
- output: analog 0.1 to 0 .3 V
- High concentration of about 4 Volt

- Detection gas: natural gases & Methane
- Concentration: 200 to10000 ppm (Natural gases or Methane)
- Interface: one Transistor-Transistor logic compatible input , one Transistor-Transistor logic compatible output
- Heater consumption: <750mw
- Operating temp: From 14 - 122 °F
- Related humidity is less than 95%
- Oxygen concentration is 21 percent
- Oxygen concentration can influence sensitivity
- Load-resistance: 20KΩ
- Sensing-Resistance Rs: 10KΩ- 60KΩ (1000ppm CH_4)
- Preheat time: Over 24 hour

3) NI USB-6008

[1]8 Analog Inputs pin are 12Bit 10 kS/s, 2 Analog Outputs which are frequency 150 Hz. 12 Digital input output USB Multifunction input output Device—The NI USB6008 is a low cost multifunction DAQ device. It offers analog input outputs and digital inputs outputs and a 32bit counter. The USB6008 provides functionality applications as simple like data logging handy measurements and lab experiments. The device features a shallow mechanical package and is bus is powered for not complex portability. We can easily interface sensors or signals to the NI USB6008 by using screw-terminal connectivity. The inclusion of .NIDAQmx driver can configure utility and simplifies the configuration and measurements.

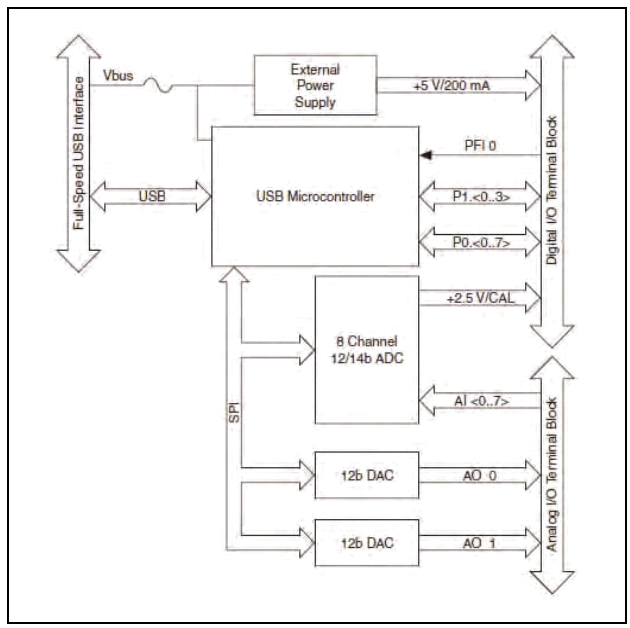

Fig No.4: Block diagram of NI USB-6008

Specifications

- Analog Inputs: 8 single-ended/4 differential
- Input Resolution: 12
- Max Sampling Rate (kS/s):10
- Analog Outputs:2
- Output Resolution:12
- Output Rate (Hz):150
- Digital I/O Lines:12
- 32-Bit Counter:1
- Triggering Digital

e ISSN 2348 –1269, Print ISSN 2349-5138
Marathwada Mitra Mandal, Pune

Threshold Value: For Carbon Monoxide 50 ppm. (Parts per million).
Threshold Value: For Carbon Dioxide 5000 ppm (Parts per million)
Standard value: For Carbon Dioxide for Human Respiratory System.
Standard value of natural concentration of CO in air is around 0.2% parts/million (ppm) and that quantity is not infected to people

B) Software

[1]Lab View is basically a system representation platform which is for visual programming language. Lab View consist of generic tools for acquiring, analyzing , displaying and storing data.
Lab View is graphical programming approach.

Application

- Design smart machine
- Industrial equipment
- For research purpose

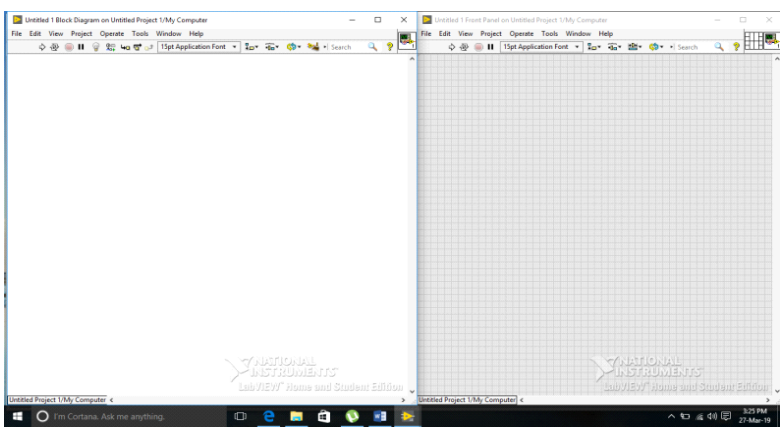

Fig no 5 Lab View

- **Flow Chart**

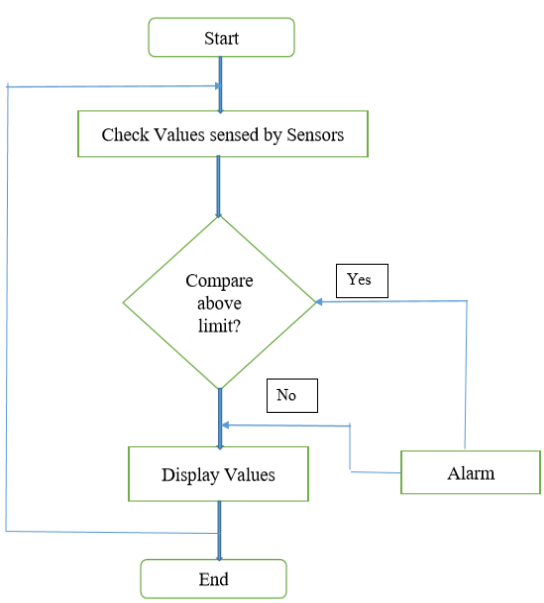

Fig no 6 Flow Chart

5) Conclusion

In "Air Pollution Monitoring System" we can detect the amount of toxic gases present in air, to further implement corrective methods to control air pollution. The system allow measurement of the levels of CO and CO_2 present in air. The experimental results demonstrate the strength of our project in terms of fast detection and real time response.

Thus from literature survey and study of input/output control devices and LabVIEW software. We can implement the "Air Pollution Monitoring System Using LabVIEW" project.

6) Advantages

- Assessing public health impacts caused by poor air quality.
- Determining whether an area is meeting the standards.
- Evaluating changes in air quality as a result of state implementation

7) Application

- Roadside pollution monitoring.
- Industrial perimeter Monitoring.
- Indoor air quality monitoring system

8) Future Scope

- Interface NO. of sensors to know the detail content of gases which are present in air.
- Design of Webpage & upload the data on webpage with accurate date and time.
- Interface global positioning system to monitor air pollution at location and upload the data for public use.

9) Refrences

1. Rajesh R. Karhe, C.S.Patil and Mahesh S. Patil Real Time DAQ & home Parameters Monitoring using LabVIEW International Journal of Advanced Research in Computer Engineering & Technology (IJARCET) Volume 2.
2. N. Kularatna and B. H. Sudantha, An Environmental Air Pollution Monitoring System based on IEEE 1451 standard vol. 8.
3. https://www.who.int/mediacentre/news/releases/2014/air-pollution/en
4. https://www.nationalgeographic.com/environment/global-warming/pollution
5. http://www.theenvironmentalblog.org/current-environmental-issues/environmentalpollution
6. http://www.ni.com/en-in.html
7. https://www.researchgate.net/publication/281859069_Air_pollution_monitoring_system_using Lab View

e ISSN 2348 –1269, Print ISSN 2349-5138
Marathwada Mitra Mandal, Pune

Bomb Disruptor Using an Electromagnetic Pulse

Soham Athavale, Viraj charwad, Prof. Anagha Kunte
Marathwada Mitra Mandal's College of Engineering,
Karvenagar, Pune, India

ABSTRACT: *On the basis of Electromagnetic Pulse, we have designed an electromagnetic pulse generator to disrupt or diffuse a bomb circuit. A pulse will be generated using a copper wire with insulation. It will have an AC supply and can produce enough strong pulse to destroy or malfunction an electronic circuit. The generated pulse can be used to disrupt a bomb circuit. [2]The pulse generated attacks the electronic part that is the controller and destroys it. As it becomes unable to function the bomb becomes useless, due to induction of high voltage currents inside it. Thus the system is designed to be user friendly. It is also cheap to construct compared to traditional bomb diffusing tools and equipments.*

Keywords: *Electromagnetic pulse (EMP), Insulated copper coil, Spark gap, Controller, Detonator, Explosives*

1. Introduction

Now-a-days the terrorist activities are increasing. Their main targets are the civilian areas. It is because the civilians are not capable to confront them. They get panic easily. They aren't trained to handle such situations at all. It gives them a lots of advantages to plan something nasty like bomb blasts. It creates a havoc. Like some days back there was Pulwama attack in which an IED (Improvised Explosive Device) was used. Even these bombs are detected before blasts it takes a high amount of risk and time in diffusing them. In such conditions the bomb squads are called and the situation is taken over by highly skilled personnel. But its takes time. So there should be something which is not only easily available but also user friendly. Because a civilian or a common man cannot diffuse a bomb without specialized training. An EMP generator is not only cheap but also user friendly. Anyone can use it easily. It just needs to be pointed towards the victim circuit and the switch is to be closed. The rest happens on its own. [2]The victim circuit (towards which the generator is pointed) gets destroyed due to induction of high voltage currents in it. Now in a bomb circuit there are three main components controller, detonator and explosive. We will be focusing on the controller as it is the electronic part common in all types of bombs present. Thus the EMP circuit is designed to be user friendly and easy to use. Its construction is also cheap compared to traditional methods.

II. Literature Survey

The literature survey presents an overview of the generation. It also explains the general structure a bomb circuit and its working. They also explain general working of a spark gap. The research papers were analyzed and content was studied. After analyzing what things have been published in the research papers, we present our ideas which were focused on improving the existing bomb diffusing system.
P Sarkar , ETOA depicted in his paper, 'A compact battery powered system for EMP generation [1]. Bindu.S , ETOA modelled a Spark gap switch in her paper [2].

Graphs

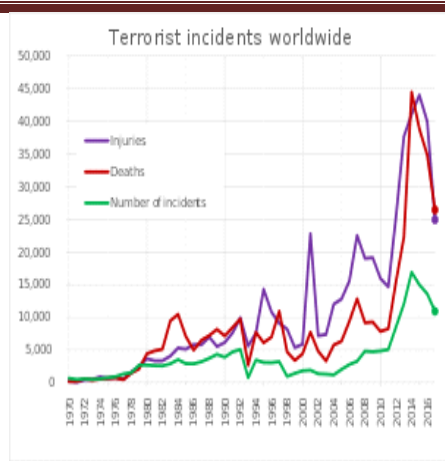

Figure (i):Terrorist activities worldwide

[7]As we can see in the above image the terrorist attacks has a steep rise in 2015 – 2016. Most of them took place were bomb blasts. Thus we can understand the need of some solution to curb them.

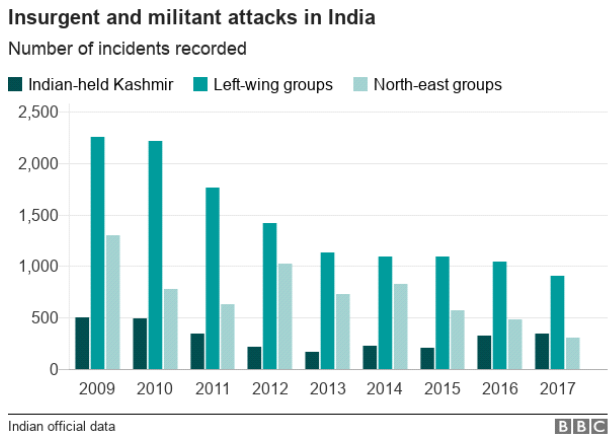

Figure (ii):Terrorist activities in India

[9]The above image shows us the data of terrorist activities in India according to the data released by Indian Government.

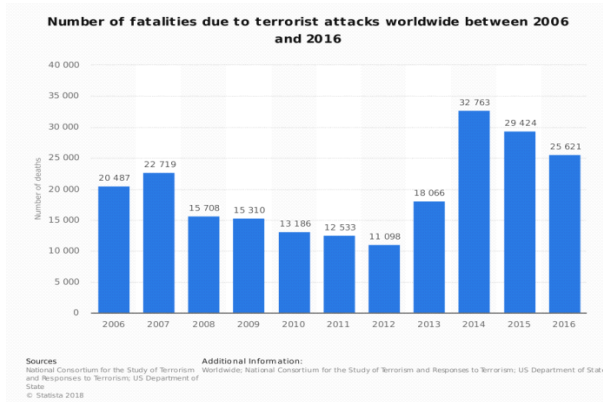

Figure (iii)Fatalities due to terrorist activities worldwide

e ISSN 2348 –1269, Print ISSN 2349-5138
Marathwada Mitra Mandal, Pune

[8]The above image tells us about the year wise fatalities world wide due to terrorist attacks.
Considering the above graphs we learned that the terrorist activities are increasing day by day and they are killing a huge number of people.

III. Block Diagram

Following figure shows block diagram of bomb disruptor system consisting of power supply coil.

The Disrupted Microcontroller of Bomb
EMP Generator Using Coil
High Volt Power Supply

Figure 6 shows actual circuit diagram.

IV. Process

In our system we use an input of 230v AC for the generator. A step up transformer is used to get an output voltage supply of 500v with turns ratio,
where [5]N1 is no. of primary windings and N2 is no. of secondary windings. According to the circuit a capacitor (AC condenser) is connected in series. We used a condenser of 2.5 µf in our circuit. [6]The capacitor is charged and discharged according to the supply. During the positive half cycle the capacitor gets charged. During the next negative half cycle it gets discharged. The spark gap we used was gapped for 500v supply. [1]A spark gap is a setting of two electrodes separated by air or other gas according to its permittivity. In our circuit the electrodes are separated by air.

Electrode - 1
Electrode - 2

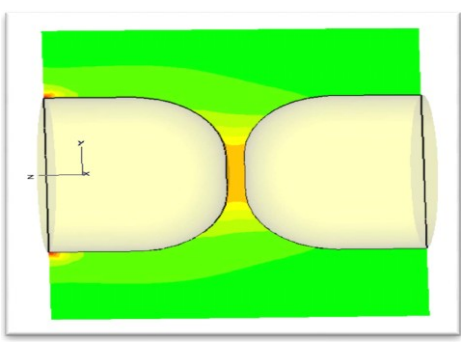

Figure no. 4- Spark gap

As the electrodes are separated by a di-electric, when supply is applied it is accumulated on the electrode. When the potential difference between two electrodes goes above 'forward breakover voltage' (Vbr) it conducts. The current breaks the barrier of air and flows through the gap until it goes below 'holding current' (Ih). Thus the current flows only for a specific instance of time. It gives a pulsating output.

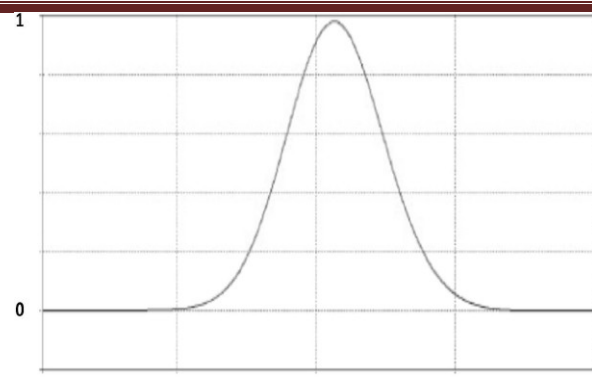

Figure no. 5 - Output of a spark gap

Our next component is the copper coil. The coil we used was an insulated copper wire coil. It had a diameter of 0.35 cm and was 10 meters long. The coil was in parallel with the capacitor.
Thus the generator assembly was done.

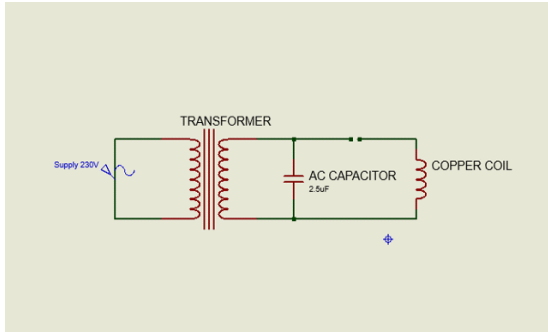

Figure no.6 – circuit diagram

The generated pulse is applied to an electronic circuit. It be the controller of a bomb circuit. [3]A bomb circuit contains three main parts- controller, detonator and explosive. We would concentrate on the controller. It is an electronic component common in all types of bombs. [4]The controller activates the detonator when required conditions arise and the detonator explodes the explosives.
Therefore our prime target is the controller. When exposed to an Electromagnetic pulse it will malfunction. Hence it would not activate the detonator and the explosives will not explode.

V. Results

- Initially the current does not flow through the circuit due to spark gap. But when the potential difference goes over Vbr the current flows until it drops down the Ih. Thus the current flows only for a certain instance of time.
- The circuit exposed to an Electromagnetic pulse either is destroyed or it malfunctions. Thus it incapacitates the circuit to perform its assigned task.

e ISSN 2348 –1269, Print ISSN 2349-5138
Marathwada Mitra Mandal, Pune

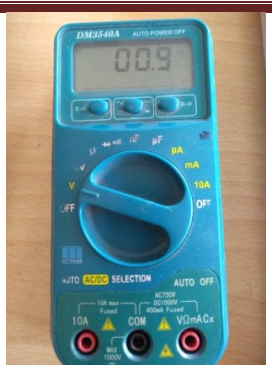

Figure 7 Before application of EMP

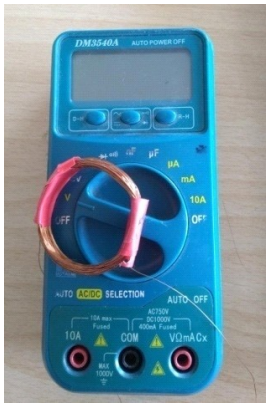

Figure 8 After application of EMP

Figure 7 shows that mulimeter is in working condition and figure 8 shows that multimeter is stop functioning

VI. Observations

- The pulse generated is powerful if the supply current is as greater as possible.
- The pulse is more powerful if the copper wire is thicker.
- [2]The victim circuit is incapacitated permanently.

VII. Advantages

- [2]Can destroy any electronic circuit towards which it is pointed.
- Can be used to disrupt a bomb circuit.
- Does not need any specially skilled person to operate.
- Cheap construction.
- A 230v supply is available easily anywhere so can be used anywhere easily.
- User friendly. Can be available in minutes.

VIII. Disadvantages

- If not taken proper care while operating can damage friendly circuits too.
- If not handled with care high voltage can posses shock to the user.
- Needs high voltage supply.

IX. Conclusion

A cheap bomb disruptor circuit can be made by just using some common components which are available easily. The circuit can be easily operated by any individual and will not need a personnel well trained with specific skill set.

X. Future Scope

The design and the concept has a wide scope in future. If the pulse can be focused in a specific direction it can be used to take down drones and UAVs (Unmanned Ariel Vehicles). Upto some extent it can also be used to disrupt missiles which are non – ballistic and specifically cruise missiles. An EMP bomb can be used to neutralize electronic devices activities in a specific area.

References

1. Bindu.S; H.A Mangalvedekarl; Sachin Umbarkarl; Archana Sharma; D. P. Chakravarti; P.C Saro; K C Mittal (MODELLING OF A SPARK GAP SWITCH), 2012 IEEE 10th International Conference on the Properties and Applications of Dielectric Materials, 2012.
2. https://en.wikipedia.org/wiki/Electromagnetic_pulse
3. https://en.wikipedia.org/w/index.php?search=design_of_a_bomb&title
4. https://en.wikipedia.org/w/index.php?search=detonators&title
5. 'XI Fundamentals of Electronics' by R.D. Supekar, Mayureshwar Prakashan Pune, Tenth Edition.
6. 'Applications of electronics' by R.D.Supekar, Mayureshwar Prakashan Pune, Twelveth Edition.
7. Global-Terrorism-Index-2017
8. https://www.google.com/search?q=Amount_of_terrorist_activities_worldwide_UN_survey
9. https://en.wikipedia.org/wiki/Terrorism_in_India

e ISSN 2348 –1269, Print ISSN 2349-5138
Marathwada Mitra Mandal, Pune

IOT Based Adaptive Traffic Congestion Control

Aksa Mary Pramod, Umang Mehta, Soham Shirwadkar, Anushka Sankpal
Department of Electronics and Telecommunication
Fr. Conceicao Rodrigues Institute of Technology,
Mumbai University, Vashi, Navi Mumbai, India

ABSTRACT: *Traffic being one of the major problem in cities and with its ever increasing nature, it makes it vital to know the road traffic density in real time for better traffic signal control and effective management of road traffic. Causes of traffic congestion include insufficient capacity, unrestrained demand, large Red Light delays. Insufficient capacity and unrestrained demand are somewhat interrelated. However the delay of respective light is hard coded and not dependent on traffic. Therefore, there is a need for simulating and optimizing traffic control. Increasing traffic causes a lot of disturbances in our daily routine. Image processing and surveillance systems have been widely used in past few years in traffic management for traveler's information, ramp metering and updates in real time.*

This project presents the method to use live images feed from the cameras at traffic junctions for real time traffic density calculation using image processing. Also, it focuses on the algorithm for switching the traffic lights according to vehicle density on road, thereby aiming at reducing the traffic congestion on roads. In turn it will help reduce fuel consumption and waiting time. It will also provide significant data which will help in future road planning and analysis.

Keywords: *IOT, ThingSpeak, Traffic Congestion control.*

1. Introduction

India stands second in the list of having the largest world network. Congestion in traffic is a major problem these days. Despite the fact that it appears to pervade all over, urban cities are the ones most influenced by it and its ever increasing nature makes it imperative to know the traffic density of road in real time for effective management of traffic.

Insufficient capacity, unrestrained demand, large Red Light delays are one of the major causes of Traffic congestion. While these two are interrelated, the delay of respective light is hard coded and not dependent on traffic. Therefore, the need for simulation and optimization of traffic control to better accommodate this, leads to rise in demands.

One of the methods of tackling the problem of traffic congestion at signals is to use Photoelectric sensors at the signals [1]. With the help of this information gathered from these sensors we can monitor the traffic density of vehicles and suitable algorithm can be deployed to control the traffic lights based on relative weight of each road. The system will allocate more green light time to the traffic for that road which is more congested as compared to the other less congested roads according to the calculation of the relative weight of each road. This system is based on real time operations. However, the use of Photoelectric sensors at each signal is not feasible as installation of sensors would make the system expensive and impractical.

The proposed technique uses Image Processing for traffic control. Traffic density of lanes is calculated using images of lanes that are captured using webcam. The model will smartly allocate the time period of green light for each road, according to the traffic densities [3]. [2] It was chosen for calculation of traffic density as cameras are very much cheaper than other devices such as sensors.

- **System Components**

A. Logitech c170 webcam

The webcam used in this paper is a video camera that captures images frame by frame and is compared with the reference image stored in the Raspberry pie.

B. Raspberry Pie 3.0

Raspberry Pie used is a single board computer which receives the captured image from the webcam which is connected to it, processes it, compares it with the reference image. The percentage difference between the captured image and the reference image is sent to ThinkSpeak website.

- **Implementation**

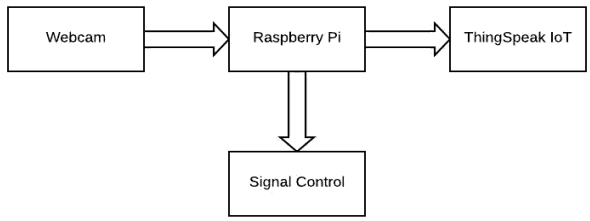

Figure 1. Basic Block Diagram of the System

Figure 1 shows the basic block diagram of the proposed system for traffic congestion control. The images captured by the webcam will be processed by the Raspberry Pi and matching of the reference image and the captured image will be done. Depending upon the percentage difference between the two images control signals will be given to change the traffic signal lights. This information is also sent to the ThingSpeak IoT for analysis [4]. Analysis includes graphical representation of traffic density on daily basis.
The proposed technique uses Image Processing for traffic congestion control. Image processing technique enhances the raw images received from cameras placed at the traffic signals. The issues related to image representation, compression techniques and various complex operations, which can be carried out on the image data are covered in different Image Processing operations. Some of these operations that come under image processing are image enhancement operations such as sharpening, blurring, brightening, edge enhancement. In Image processing technique pictures or frames of video captured by the webcam is taken as an input and the output of image processing can be either an image

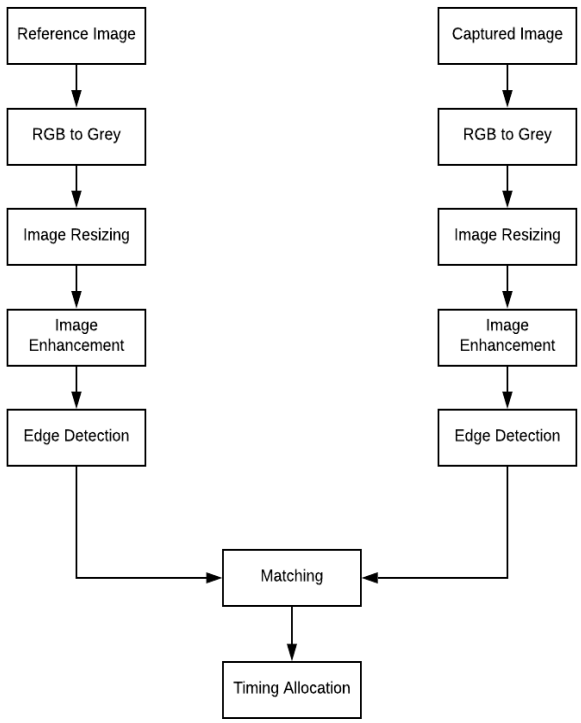

Figure 2. Block Diagram of Image Processing.

Figure 2 shows the algorithm for image processing. The image is captured frame by frame by the webcam which is placed at the traffic signals. This image is then converted from RGB to Grey scale image. We

e ISSN 2348 –1269, Print ISSN 2349-5138
Marathwada Mitra Mandal, Pune

consider RGB value of each pixel to make the output single valued which gives the brightness of that pixel. The conversion is done as follows

Brightness=0.3R+0.59G+0.11B

The image is then resized to decrease the number of pixels. Image resizing is done as it is easier to work on smaller image. This process also makes sure that the reference image and the captured image are of the same size.
The resized image is then enhanced using Power Law Transformation which increases the contrast level of the characters and improves segmentation. The basic form of Power Law Transformation is

$s = cr^{\gamma}$

Edge Detection algorithm is applied on this enhanced image to find borders of the object. Canny Edge detection is the preferred choice of edge detection technique. The reason is that it has low error rate, the edge point is well localized and single edge point response is obtained. The canny edge detection process is done by first smoothening the image using Gaussian filter. The gradient magnitude and the angle for the image is computed. Non-maxima suppression is applied on the gradient magnitude and double threshold and connectivity analysis is used to detect and connect the edges.
The edge detected real time image is compared with the edge detected reference image. This method has some disadvantages, but it is the simplest algorithm to implement. The difference percentage is expressed as
The reference image used for this process is image of the road with no vehicles in it. Hence, the difference between the reference image and the captured image of that road gives the traffic on that road at that particular time. If the percentage difference is high, it indicates that the traffic density is high. The desired threshold can be set and depending on this threshold, different amount of time can be allocated to the green signal.
The difference between the images is uploaded into ThingSpeak channel. This information can be viewed in the form of graph which shows statistics of traffic congestion on the road. This information can be used for analysis of the daily traffic at the crossroads.

- **Results**

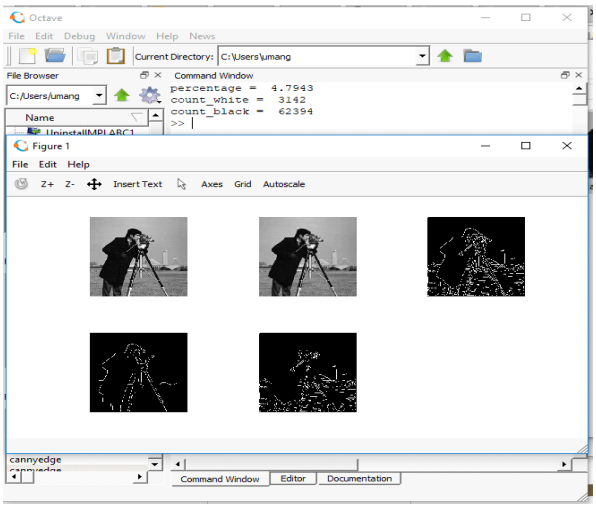

Figure 3. Canny Edge Detection on Sample Images.

Figure 3 shows the working of canny edge detection on a sample image for different threshold values. Based on the threshold value the number of objects whose edges are detected varies.

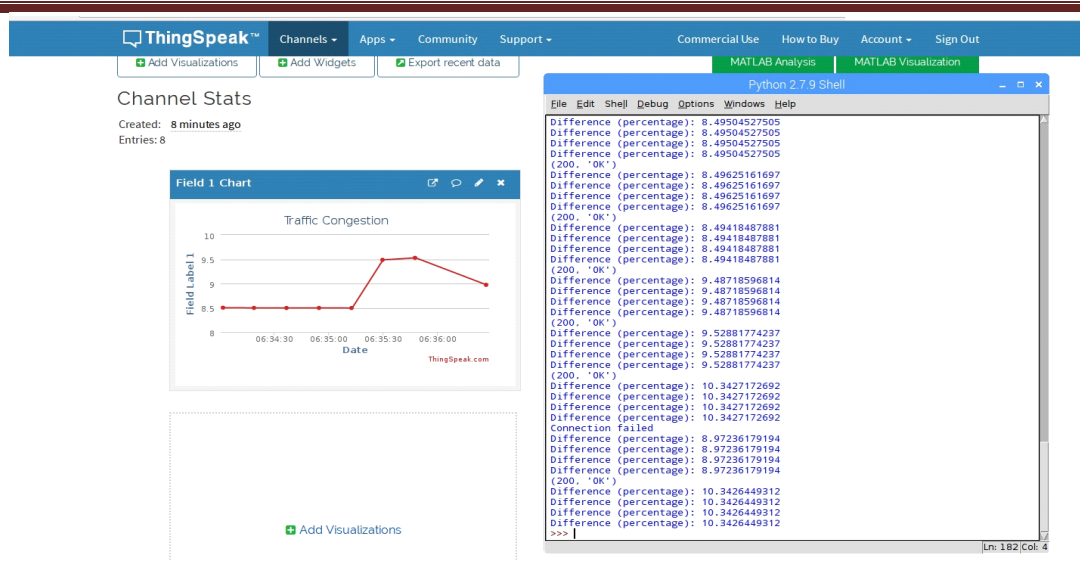

Figure 4 shows the ThingSpeak channel and the Python shell on which the percentage difference between the reference and captured image is displayed. A Graphical representation is obtained on the ThingSpeak channel indicating the traffic congestion on daily basis.

As the difference between the reference image and captured image is more we get a greater value of percentage difference indicating the there is more amount of traffic on the road. Through continuous monitoring of the road we can analyse the traffic on the road during various hours of the day as well as different days of the week. Hence, comparative study about the traffic variations during busy hours and non busy hours and also, weekdays and weekends can be done. Thus, it can be used to analyse the traffic behaviour at different times of the day, week or month.

- **Conclusion**

The proposed system does not have any human intervention and can be run autonomously without any operator. The algorithm dynamically allocates traffic signal time based on real time information. This makes the system time efficient as it reduces the amount of time for green signal at less congested roads. Along with this, the system indirectly helps reduce the pollution caused by the stationary vehicles.

Raspberry Pi based system is faster and allows the use of webcam to capture images. The rate of capture of images is high and it also gives better quality of images. Use of high level language like Python script is also possible which can be used to transmit data to platforms like IoT. The processing of the image and generation of control signals can be done on the Raspberry Pi itself rather than processing it on the centralized system. The use of IoT platform helps to make the traffic congestion data easily accessible by anyone to perform various analysis.

This project can be extended by enabling suitable software techniques to identify emergency vehicles like ambulances and fire brigades to let them pass as soon as possible, thus ensuring priority to such vehicles which can save lives and property

- **References**

1. Vaibhav k, L Pranau k and Divyanshi M, "Smart Traffic Monitoring", CSE3009, VIT University Project Presentation, May 5, 2017.
2. Badura, S.; Lieskovsky, A., "Intelligent Traffic System: Cooperation of MANET and Image Processing," Integrated Intelligent Computing (ICIIC), 2010 First International Conference on, vol., no., pp.119,123, 5-7 Aug. 2010.
3. Salama, A.S.; Saleh, B.K.; Eassa, M.M., "Intelligent cross road traffic management system (ICRTMS)," Computer Technology and Development (ICCTD), 2010 2nd International Conference on, vol., no., pp.27,31, 2-4 Nov. 2010
4. https://thingspeak.com/channe